CH-SMC-00.33-VCC180

Weidmüller Interface GmbH & Co. KG
Klingenbergstraße 26
D-32758 Detmold
Germany

www.weidmueller.com

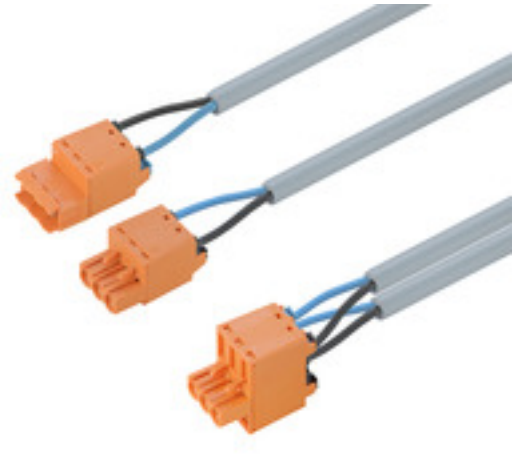

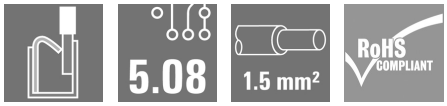

Base counter, gateway, control box and overvoltage protection device are connected with pre-assembled cable sets as point-to-point or Y-assembly. Weidmüller offers the right connection solutions for this, conforming to FNN and DIN-VDE 0603 standards. Pre-assembled power cables with 6kV overvoltage protection round up the portfolio.

General ordering data

Version	Smart Metering Cable Assemblies, 6 kV, Pin, Socket connector, IP20, 600 V, KB PUR US 2X1.5 GY XX 6KV, 0.33 m
Order No.	2775840033
Type	CH-SMC-00.33-VCC180
GTIN (EAN)	4064675041535
Qty.	10 pc(s).

CH-SMC-00.33-VCC180

Weidmüller Interface GmbH & Co. KG
Klingenbergstraße 26
D-32758 Detmold
Germany

www.weidmueller.com

Technical data

Dimensions and weights

Net weight	5.6 g

General Technical Data

Number of poles	2	Protection degree	IP20
Rated current	18.5 A	Rated impulse withstand voltage	6 kV
Rated voltage	600 V		

Technical Specifications Connector

Connector	Number of poles	2
	Individual components connector	
	Number of poles	2
	Type	Female
	Individual components connector	

Technical specifications for cable

Bending radius, min., moving	15 x cable diameter	Bending radius, min., stationary	10 x cable diameter
Cable Material	PUR/ TPE	Cable length	0.33 m
Core cross-section	1.5 mm²	Halogen	No
Insulation	PP	Line type	KB PUR US 2X1.5 GY XX 6KV
Number of wires	2	Outside diameter	6.4 mm ± 0.25 mm
Sheathing colour	grey	Shielded	No
Temperature range, moving, max.	90 °C	Temperature range, moving, min.	-25 °C
Temperature range, stationary, max.	90 °C	Temperature range, stationary, min.	-40 °C

Classifications

ETIM 6.0	EC001576	ETIM 7.0	EC001576
ETIM 8.0	EC001576	ETIM 9.0	EC001576
ETIM 10.0	EC001576	ECLASS 9.0	27-06-04-02
ECLASS 9.1	27-06-91-90	ECLASS 10.0	27-06-04-02
ECLASS 11.0	27-06-04-02	ECLASS 12.0	27-06-04-02
ECLASS 13.0	27-06-04-02	ECLASS 14.0	27-06-04-02
ECLASS 15.0	27-06-04-02		

Environmental Product Compliance

RoHS Compliance Status	Compliant without exemption
REACH SVHC	No SVHC above 0.1 wt%

Approvals

ROHS	Conform

Downloads

Catalogues	Catalogues in PDF-format

CH-SMC-00.33-VCC180

Weidmüller Interface GmbH & Co. KG
Klingenbergstraße 26
D-32758 Detmold
Germany

www.weidmueller.com
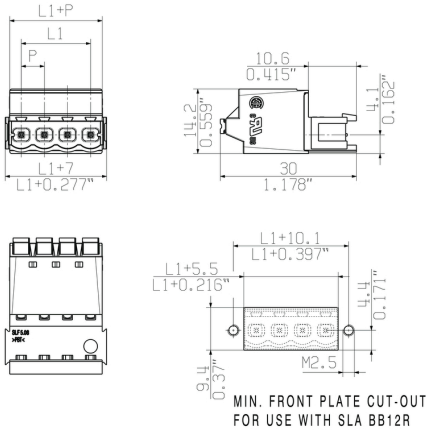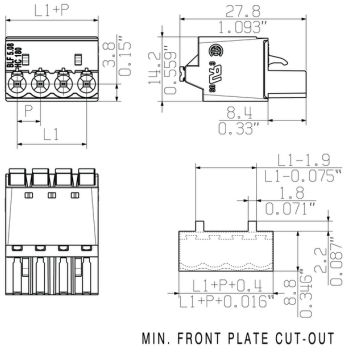
Drawings