# Data sheet

## M12 Sensor/actuator cable, A-coded, 1.0 m, M12 plug straight - M12 jack straight, unshielded, 5-pole, PUR

**P/N**
**142MDA12010**
**EAN 4251394647883**
2026/09/07
Version: H

## Illustrations

Dimensional drawing

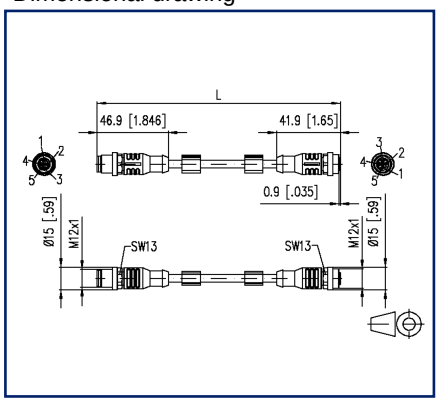


Wiring diagram

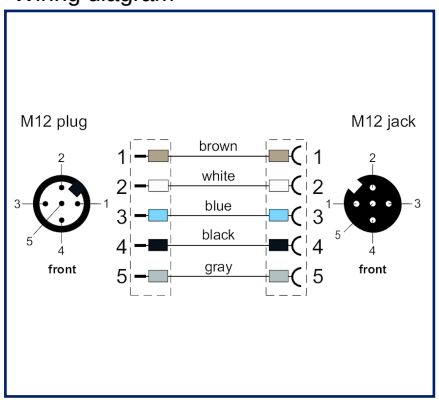


See enlarged drawings at the end of document

## Product specification

Flexible, silicone- and halogen-free control cable with high mechanical strength. The cable is resistant to chemicals, hydrolysis and microbes. The drag-chain application is possible at a bending radius of minimum 10xd. Due to its weld-field immunity, the cable is very well suited for the flexible application in robotics, machine tools and metal-cutting production. The cables meet the UL and CSA (UL10493/20549; cULus) requirements. Special features: flame retardant, seawater resistant, recyclable, LABS free, RoHs compliant, acid and alkali resistant, ozone resistant, UV resistant, hydrolysis proof, drag chain resistant, torsion resistant, welding sparks resistant, halogen free, silicone free, oil resistant

- Standard variants: 1.0 m, 2.0 m, 5.0 m, 10.0 m.
- Other cable lengths on request.

© 2026 METZ CONNECT - Technische Änderungen vorbehalten! Subject to modifications! Sous réserve de modifications techniques!

# M12 Sensor/actuator cable, A-coded, 1.0 m, M12 plug straight - M12 jack straight, unshielded, 5-pole, PUR

**P/N**
**142MDA12010**
**EAN 4251394647883**
2026/09/07
Version: H

## Technical Data

| General Data | |
|---|---|
| Fields of application | Industrial Ethernet |
| Design | Sensor/actuator connection line M12, A-coded |
| Shielding | unshielded |
| Transmission technology | Copper |
| Color coding fiber/ wire(s) | brown, white, blue, black, gray |
| Color | black |
| Dimensions | |
| Dimension - Interface 1 (L x W x H) | 46.9 mm x 15 mm x 15 mm |
| Dimension - Interface 1 (L x W x H) | 1.846 in. x 0.591 in. x 0.591 in. |
| Dimension - Interface 2 (L x W x H) | 41.9 mm x 15 mm x 15 mm |
| Dimension - Interface 2 (L x W x H) | 1.65 in. x 0.591 in. x 0.591 in. |
| Cable length (m) | 1 m |
| Cable length (ft) | 3.28 ft |
| Labeling option | identification label carrier |

| Connections/interfaces | |
|---|---|
| Connector technology interface 1 | M12-plug |
| Connector technology interface 2 | M12-jack |
| Coding interface 1 | A-coded |
| Coding interface 2 | A-coded |
| Number of positions/contacts interface 1 | 5 |
| Number of positions/contacts interface 2 | 5 |
| Termination data, stranded wire (min. - max.) | |
| Conductor cross section, stranded wire | AWG 22/42 |
| Conductor cross section, stranded wire | 0.34 mm² |
| Stranded wire structure | 42x0.10mm |
| Cable sheath diameter (min. - max.) | |
| Cable sheath diameter | 5.2 mm |
| Cable sheath diameter | 0.205 in. |

© 2026 METZ CONNECT - Technische Änderungen vorbehalten! Subject to modifications! Sous réserve de modifications techniques!

# M12 Sensor/actuator cable, A-coded, 1.0 m, M12 plug straight - M12 jack straight, unshielded, 5-pole, PUR

**P/N**
**142MDA12010**
**EAN 4251394647883**
2026/09/07
Version: H

## Technical Data

| | |
|---|---|
| **Electrical characteristics** | |
| Current carrying capacity | 4 A at 40 °C |
| Rated voltage | 60 V |
| Insulation resistance | min. 100 MOhm |
| **Mechanical data** | |
| Life - Number of mating cycles | min. 100 |
| Torsion | +/-180°/m, < 1 million cycles |
| Maximum operating bending radius | 52 mm |
| Alternating bending radius | 52 mm |
| acceleration | 5 m/s² |

| | |
|---|---|
| **Materials and material properties** | |
| Cable | |
| Material - Conductor | Cu (copper) |
| Material - Conductor Insulation | polypropylene |
| Material - Cable jacket | PUR |
| Flame retardancy | yes |
| Interface 1 | |
| Material - Body interface 1 | Plastics |
| Material - Contact interface 1 | CuSn |
| Material - Contact finish interface 1 | Au (gold) |
| Material - Contact carriers interface 1 | Plastics |
| Material - Union nut interface 1 | CuZnPb (brass) |
| Material - Union nut finish interface 1 | Ni (nickel) |
| Interface 2 | |
| Material - Body interface 2 | Plastics |
| Material - Protective housing interface 2 | FPM/FKM |
| Material - Contact interface 2 | CuSn |
| Material - Contact finish interface 2 | Au (gold) |
| Material - Contact carriers interface 2 | Plastics |
| Material - Union nut interface 2 | CuZnPb (brass) |
| Material - Union nut finish interface 2 | Ni (nickel) |
| Oil resistance | yes |
| UV-resistance | yes |

© 2026 METZ CONNECT - Technische Änderungen vorbehalten! Subject to modifications! Sous réserve de modifications techniques!

# M12 Sensor/actuator cable, A-coded, 1.0 m, M12 plug straight - M12 jack straight, unshielded, 5-pole, PUR

P/N
142MDA12010
EAN 4251394647883
2026/09/07
Version: H

## Technical Data

| | |
|---|---|
| **Materials and material properties** | |
| drag chain suitable | yes |
| torsional | yes |
| RoHS | compliant |

| | |
|---|---|
| **Environmental conditions** | |
| Temperature (min. - max.) | |
| Temperature - Operating °C | -50 °C - 90 °C |
| Temperature - Operating °F | -58 °F - 194 °F |
| Temperature - Installation °C | -30 °C - 90 °C |
| Temperature - Installation °F | -22 °F - 194 °F |
| Temperature - drag chain °C | -25 °C - 60 °C |
| Temperature - drag chain °F | -13 °F - 140 °F |
| Particulate ingress interface 1 | IP6X when plugged in |
| Liquid ingress/immersion interface 1 | IPX5, IPX7, IPX8 when plugged in |
| Particulate ingress interface 2 | IP6X when plugged in |
| Liquid ingress/immersion interface 2 | IPX5, IPX7, IPX8 when plugged in |
| Pollution degree interface 1 | 3 |
| Pollution degree interface 2 | 3 |
| **Approvals** | |
| UL listed (file no.) | Approval pending |
| **Standards/Regulations** | |
| Connectors for electronic equipment | |
| circular connector | DIN EN 61076-2-101 |
| **Classifications** | |
| ETIM 7.0 | EC001855 |
| ETIM 8.0 | EC001855 |
| ETIM 9.0 | EC001855 |
| ETIM 10.0 | EC001855 |

© 2026 METZ CONNECT - Technische Änderungen vorbehalten! Subject to modifications! Sous réserve de modifications techniques!

# M12 Sensor/actuator cable, A-coded, 1.0 m, M12 plug straight - M12 jack straight, unshielded, 5-pole, PUR

**P/N**
**142MDA12010**
**EAN 4251394647883**
2026/09/07
Version: H

## Technical Data

### Packing details

| | |
|---|---|
| Type of packaging | 1 pc(s) / plastic bag |

### Application note

This product is a standard product of METZ CONNECT. METZ CONNECT is not aware of the specific intended use of the goods by the Customer or any customers of the Customer. The Customer guarantees that it has fully and sufficiently tested the use of the goods and any product modifications, product changes or product enhancements with regard to the specific intended use in accordance with the state of the art or in any other way.

© 2026 METZ CONNECT - Technische Änderungen vorbehalten! Subject to modifications! Sous réserve de modifications techniques!

# M12 Sensor/actuator cable, A-coded, 1.0 m, M12 plug straight - M12 jack straight, unshielded, 5-pole, PUR

P/N
142MDA12010
EAN 4251394647883
2026/09/07
Version: H

## Illustrations

Dimensional drawing

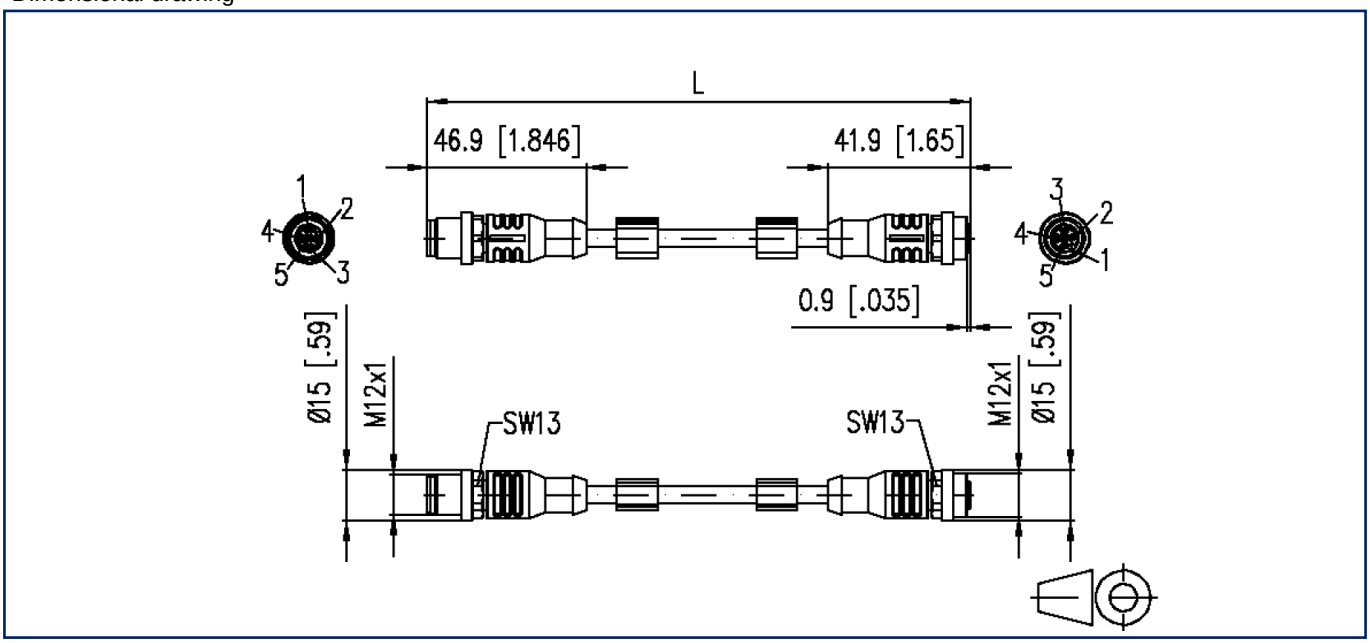


Wiring diagram

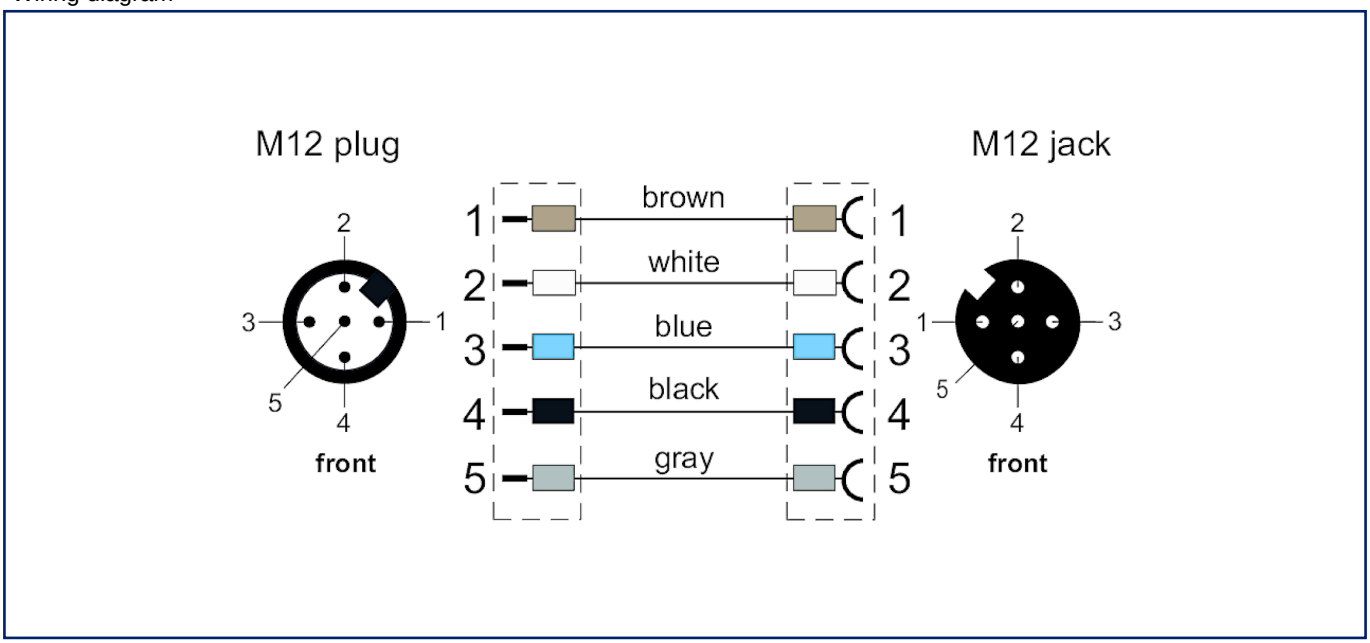


© 2026 METZ CONNECT - Technische Änderungen vorbehalten! Subject to modifications! Sous réserve de modifications techniques!

# M12 Sensor/actuator cable, A-coded, 1.0 m, M12 plug straight - M12 jack straight, unshielded, 5-pole, PUR

**P/N**
**142MDA12010**
**EAN 4251394647883**
2026/09/07
Version: H

## Illustrations

Principle diagram

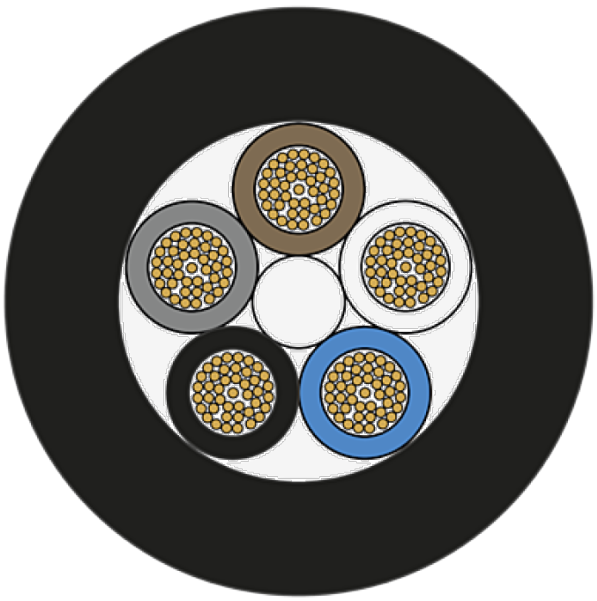

© 2026 METZ CONNECT - Technische Änderungen vorbehalten! Subject to modifications! Sous réserve de modifications techniques!