SIRCOVER

Manually operated Transfer Switching Equipment

from 125 to 3200 A

svr_151.eps

SIRCOVER
250 A

svr_214.eps

SIRCOVER Bypass
500 A

Function

SIRCOVER products are manually operated transfer switches with positive break indication. There are 4 ranges in the series:

- **SIRCOVER** for open-transition switching (I-0-II) available in 3 or 4 pole.
- **SIRCOVER** for overlapping contact switching (I-I+II-II). For applications where both sources are synchronised and there is to be no interruption to the load supply during transfer - available in 3 or 4 pole.
- **SIRCOVER Bypass** This combination of three interlocked load break switches provides 3+6 or 4+8 poles for bypass applications.
- **SIRCOVER Bypass** for overlapping contact switching (I-I+II-II). This combination of three interlocked load break switches provides bypass to a UPS or other devices when sources are synchronised and the UPS is in static bypass mode.

They provide on-load transfer between two sources for any low voltage power circuit, as well as safety isolation by double breaking per pole. Other applications include source inversion (e.g. to change the direction of a motor) or grounding/earthing.

Advantages

A complete range
There are 4 SIRCOVER models to meet every need:
The standard model I-0-II, the overlapping contact model I-I+II-II, the bypass model and the bypass with overlapping contact model I-I+II-II.

Easy to connect
For ratings of 2000 to 3200 A, we offer Copper bar connection pieces. This gives you the option of different connection methods - flat, edgewise with top or bottom bridging.

Stable positions
SIRCOVER devices have three stable positions, unaffected by voltage fluctuations and vibrations, protecting loads from network disturbances.

On-load switching
With its AC-23 and AC-33 characteristics, tested according to standards IEC 60947-3 and IEC 60947-6-1, the SIRCOVER enables safe on-load switching for any type of load. With its on-load transfer capabilities, it is not necessary to isolate loads prior to transfer therefore the SIRCOVER offers an economical solution.

The solution for

- Manufacture
- Power distribution

Strong points

- Complete range
- Easy to connect
- Stable positions
- On-load switching

Conformity to standards

- IEC 60947-6-1
- IEC 60947-3
- GB/T 14048-11

Approvals and certifications(1)

(1) Product part numbers on request.

SIRCOVER in enclosure

coff_606_front.psd

See "Enclosed transfer switches"

Sustainable advantages

- Robust design, using durable and stable materials to maximise product lifetime.
- Tested beyond market standards to maximise product lifetime - even in severe opearting environments.
- RoHS & REACH compliant

socomec
Innovative Power Solutions

What you need to know

- SIRCOVER with **break-before-make contacts (I-0-II)** are available as 3 or 4 pole models with ratings of 125 to 3200 A. They are available in steel or polyester enclosures (125 to 1600 A).
- SIRCOVER switches **with overlapping contacts (I-I+II-II)** are available as 3 or 4 pole models from 125 to 1600 A. They are available in steel enclosures.
- With **break-before-make (I-0-II)** or **overlapping contact positions (I-I+II-II)**, SIRCOVER Bypass devices are a combination of three interlocked switches enabling the use with 3+6 or 4+8 poles from 125 to 1600 A. They are available in steel enclosures.
- All SIRCOVER can be operated with **direct front operation** or **external handles**.

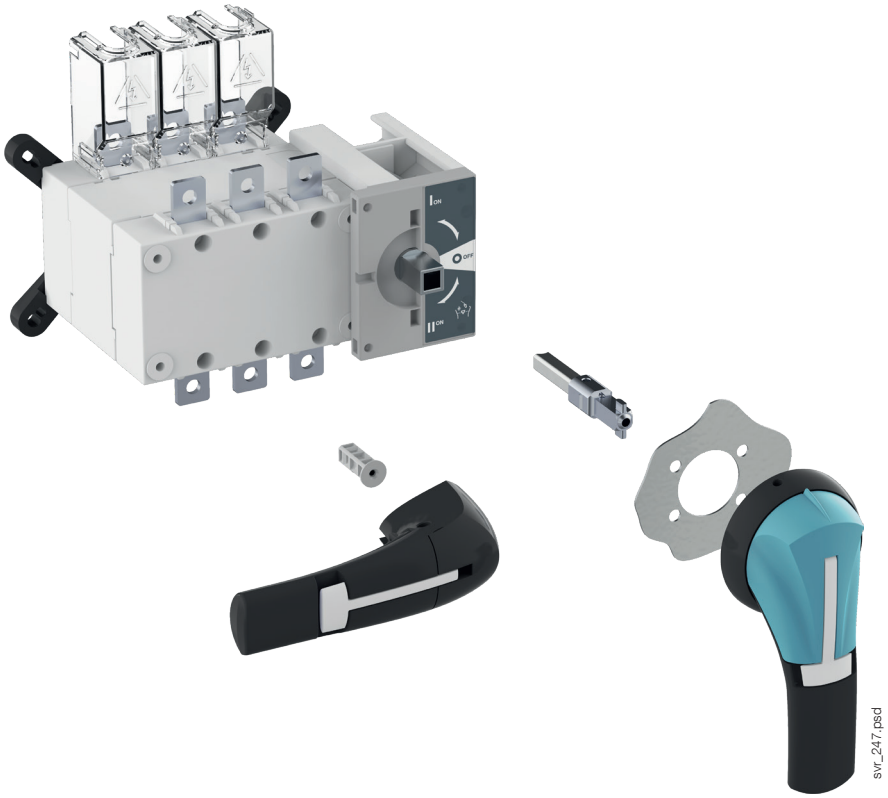

- **Copper bar connection pieces** enable connection between the 2 power terminals of the same pole (Fig. 1 and 2) and the bridging of switch I and switch II on the top or the bottom for ratings 2000, 2500 and 3200 A (Fig. 3).

Fig. 1

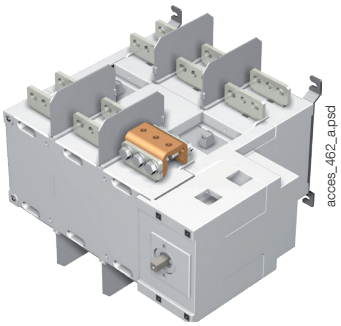

Top or bottom
flat connection

Fig. 2

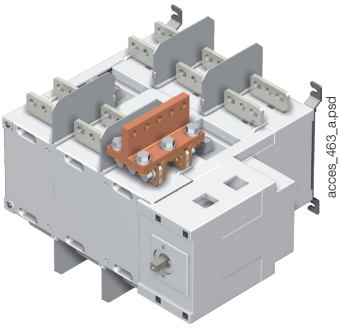

Top or bottom
edgewise connection

Fig. 3

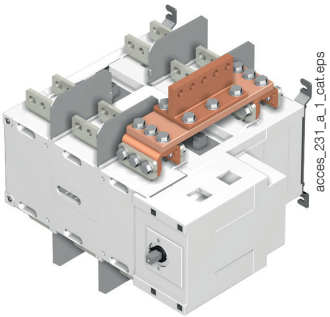

Top or bottom
bridging connection

References

SIRCOVER I-0-II

Rating(A) / Frame size	No. of poles	Switch body	Direct handle	External handle	Shaft for external operation	Bridging bars	Auxiliary contact	Terminal shrouds	Terminal screens	Inter-phase barriers
125 A / B3	3 P	41AC **3013**	J2 type Blue 1122 **1111** Red 1123 **1111**	S2 type Black IP55 1421 **2113** IP65 1423 **2113**(1)	200 mm 1400 **1020** 320 mm 1400 **1032**(1)	4109 **0019**(6)	1st/2nd NO/NC contact 4109 **0021**(2)	3 P 2694 **3014**(3)(4) 4 P 2694 **4014**(3)(4)	3 P 1509 **3012** 4 P 1509 **4012**	3P 2998 **0033**(8) 4P 2998 **0034**(8)
	4 P	41AC **4013**								
160 A / B3	3 P	41AC **3016**								
	4 P	41AC **4016**								
200 A / B3	3 P	41AC **3020**								
	4 P	41AC **4020**								
250 A / B4	3 P	41AC **3025**				4109 **0025**(6)		3 P 2694 **3021**(3)(4) 4 P 2694 **4021**(3)(4)	3 P 1509 **3025** 4 P 1509 **4025**	3P 2998 **0023**(8) 4P 2998 **0024**(8)
	4 P	41AC **4025**								
315 A / B4	3 P	41AC **3031**				4109 **0039**(6)				
	4 P	41AC **4031**								
400 A / B4	3 P	41AC **3040**								
	4 P	41AC **4040**								
500 A / B5	3 P	41AC **3050**				4109 **0050**(6)		3 P 2694 **3051**(3)(4) 4 P 2694 **4051**(3)(4)	3 P 1509 **3063** 4 P 1509 **4063**	3P 2998 **0013**(8) 4P 2998 **0014**(8)
	4 P	41AC **4050**								
630 A / B5	3 P	41AC **3063**				4109 **0063**(6)				
	4 P	41AC **4063**								
800 A / B6	3 P	41AC **3080**	J3 type Black 1132 **1111**	S4 type Black IP65 1443 **3113**	200 mm 1401 **1520** 320 mm 1401 **1532**(1)	4109 **0080**(6)		-	3 P 1509 **3080** 4 P 1509 **4080**	Included
	4 P	41AC **4080**								
1000 A / B6	3 P	41AC **3100**								
	4 P	41AC **4100**								
1250 A / B6	3 P	41AC **3120**				4109 **0120**(6)				
	4 P	41AC **4120**								
1600 A / B7	3 P	41AC **3160**				4109 **0160**(6)			1509 **3160**	
	4 P	41AC **4160**							1509 **4160**	
2000 A / B8	3 P	41AC **3200**	S5 type Black 2799 **7042**	S5 type Black IP65 1453 **8113**	200 mm 2799 **3015** 320 mm 2799 **3018**(1) 450 mm 2799 **3019**(7)	(5)	1st and 2nd NO/NC contact included		included	
	4 P	41AC **4200**								
2500 A / B8	3 P	41AC **3250**								
	4 P	41AC **4250**								
3200 A / B8	3 P	41AC **3320**								
	4 P	41AC **4320**								

(1) Standard
(2) 2 contacts supplied: one for position I and one for position II.
(3) For complete shrouding at front, rear, top and bottom, order quantity 4; if equipped with bridging bars order quantity 3.
(4) For top and bottom shrouding for the front only, order quantity 2.
(5) See "Copper bar connection kits"
(6) For a 3-pole device order quantity 3 bridging bars. For a 4-pole device order quantity 4.
(7) Shaft guide : reference 1429 0000 for shafts longer than 320 mm.
(8) A 3-pole reference contains 2 screens, a 4-pole reference contains 3.

Operating principle

SIRCOVER I-0-II

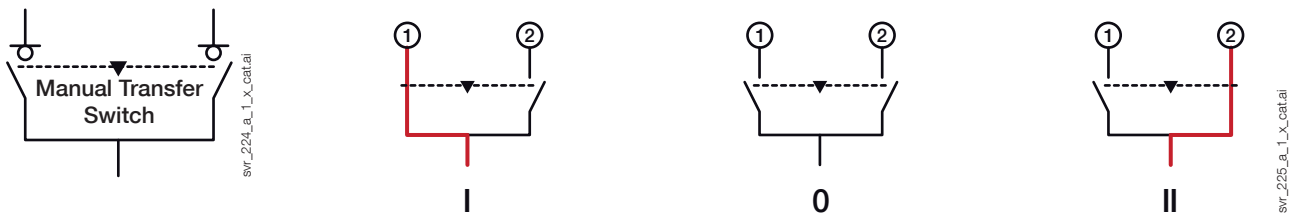

References (continued)

SIRCOVER I-I+II-II

Rating (A) / Frame size	No. of poles	Switch body	Direct handle	External handle	Shaft for external operation	Bridging bars	Auxiliary contact	Terminal shrouds	Terminal screens	Inter-phase barriers
125 A / B3	3 P	4190 **3013**	J2 type Blue 1122 **1111** Red 1123 **1111**	S2 type Blue IP65 1423 **2114**	200 mm 1400 **1020** 320 mm 1400 **1032**(1)	4109 **0019**(5)	1st/2nd NO/NC contact contact 4109 **0021**(2)	3 P 2694 **3014**(3)(4) 4 P 2694 **4014**(3)(4)	3 P 1509 **3012** 4 P 1509 **4012**	3P 2998 **0033**(6) 4P 2998 **0034**(6)
	4 P	4190 **4013**								
160 A / B3	3 P	4190 **3016**								
	4 P	4190 **4016**								
200 A / B3	3 P	4190 **3019**								
	4 P	4190 **4019**								
250 A / B4	3 P	4190 **3025**				4109 **0025**(5)		3 P 2694 **3021**(3)(4) 4 P 2694 **4021**(3)(4)	3 P 1509 **3025** 4 P 1509 **4025**	3P 2998 **0023**(6) 4P 2998 **0024**(6)
	4 P	4190 **4025**								
400 A / B4	3 P	4190 **3039**				4109 **0039**(5)				
	4 P	4190 **4039**								
630 A / B5	3 P	4190 **3063**				4109 **0063**(5)		2694 **3051**(3)(4	1509 **3063**	3P 2998 **0013**(6)
	4 P	4190 **4063**						2694 **4051**(3)(4)	1509 **4063**	4P 2998 **0014**(6)
800 A / B6	3 P	4190 **3080**	J3 type Black 1132 **1111**	S4 type Blue IP65 1443 **3114**	200 mm 1401 **1520** 320 mm 1401 **1532**(1)	4109 **0080**(5)		-	3 P 1509 **3080** 4 P 1509 **4080**	Included
	4 P	4190 **4080**								
1250 A / B6	3 P	4190 **3120**				4109 **0120**(5)				
	4 P	4190 **4120**								
1600 A / B7	3 P	4190 **3160**				4109 **0160**(5)			1509 **3160**	
	4 P	4190 **4160**							1509 **4160**	

(1) Standard.
(2) 2 contacts supplied: one for position I and one for position II.
(3) For complete shrouding at front, rear, top and bottom, order quantity 4; if equipped with bridging bars order quantity 3.
(4) For top and bottom shrouding for the front only, order quantity 2.
(5) For a 3-pole device order quantity 3 bridging bars. For a 4-pole device order quantity 4.
(6) A 3-pole reference contains 2 screens, a 4-pole reference contains 3.

Operating principle

SIRCOVER I-I+II-II

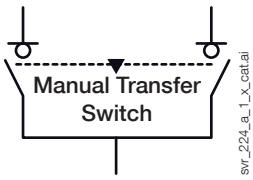

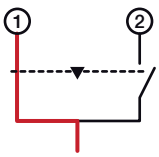

I

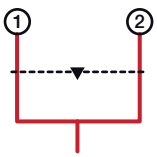

I+II

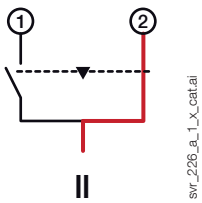

II

Warning: Please note that in I+II position there is contact overlapping.
If a UPS is present, make sure it is operating in static bypass mode before use.

References (continued)

SIRCOVER Bypass I-0-II

Rating (A) / Frame size	No. of poles	Switch body	Direct handle	External handle	Shaft for external operation	Bridging bars	Auxiliary contact	Terminal shrouds	Terminal screens	Inter-phase barriers
125 A / B3	3 P	41AC **7013**	J2 type Blue 1122 **1111** Red 1123 **1111**	S2 type Blue IP55 1421 **2113** Blue IP65 1423 **2113**(1)	200 mm 1400 **1020** 320 mm 1400 **1032**(1)	4109 **0019**(6)	1st/2nd NO/NC contact contact 4109 **0021**(2)	3 P 2694 **3014**(3)(4) 4 P 2694 **4014**(3)(4)	3 P 1509 **3012** 4 P 1509 **4012**	3P 2998 **0033**(8) 4P 2998 **0034**(8)
	4 P	41AC **9013**								
160 A / B3	3 P	41AC **7016**								
	4 P	41AC **9016**								
200 A / B3	3 P	41AC **7020**								
	4 P	41AC **9020**								
250 A / B4	3 P	41AC **7025**	J3 type Black 1132 **1111**	S3 type Blue IP65 1433 **3113**	200 mm 1401 **1520** 320 mm 1401 **1532**(1)	4109 **0025**(6)		3 P 2694 **3021**(3)(4) 4 P 2694 **4021**(3)(4)	3 P 1509 **3025** 4 P 1509 **4025**	3P 2998 **0023**(8) 4P 2998 **0024**(8)
	4 P	41AC **9025**								
400 A / B4	3 P	41AC **7040**				4109 **0039**(6)				
	4 P	41AC **9040**								
630 A / B5	3 P	41AC **7063**				4109 **0063**(6)		2694 **3051**(3)(4)	1509 **3063**	3P 2998 **0013**(8)
	4 P	41AC **9063**						2694 **4051**(3)(4)	1509 **4063**	4P 2998 **0014**(8)
800 A / B6	3 P	41AC **7080**	J4 type Black 1142 **1111**(5)	V2 type Black IP65 4199 **7146**	200 mm 2799 **3015** 320 mm 2799 **3018**(1) 450 mm 2799 **3019**(7)	4109 **0080**(6)		-	3 P 1509 **3080** 4 P 1509 **4080**	Included
	4 P	41AC **9080**								
1250 A / B6	3 P	41AC **7120**				4109 **0120**(6)				
	4 P	41AC **9120**								
1600 A / B7	3 P	41AC **7160**				4109 **0160**(6)			1509 **3160**	
	4 P	41AC **9160**							1509 **4160**	

(1) Standard
(2) 2 contacts supplied: one for position I and one for position II.
(3) For complete shrouding at front, rear, top and bottom, order quantity 6; if equipped with bridging bars order quantity 4.
(4) For top and bottom shrouding for the front only, order quantity 2.
(5) Double lever handle.
(6) For a 3-pole device order quantity 6 bridging bars. For a 4-pole device order quantity 8.
(7) Shaft guide : reference 1429 0000 for shafts longer than 320 mm.
(8) A 3-pole reference contains 2 screens, a 4-pole reference contains 3.

Operating principle

SIRCOVER Bypass I-0-II

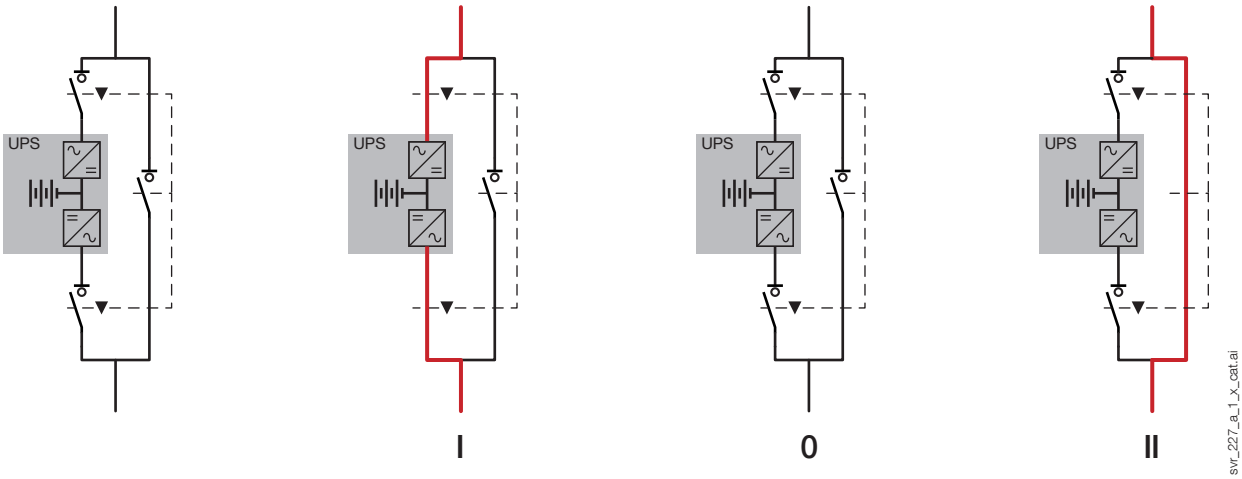

References (continued)

SIRCOVER Bypass I-I+II-II

Rating (A) / Frame size	No. of poles	Switch body	Direct handle	External handle	Shaft for external operation	Bridging bars	Auxiliary contact	Terminal shrouds	Terminal screens	Inter-phase barriers
125 A / B3	3 P	46AC **7013**	J2 type Blue 1122 **1111** Red 1123 **1111**	S2 type Blue IP65 1423 **2114**(1)	200 mm 1400 **1020** 320 mm 1400 **1032**(1)	4109 **0019**(6)	1st/2nd NO/NC contact contact 4109 **0021**(2)	3 P 2694 **3014**(3)(4) 4 P 2694 **4014**(3)(4)	3 P 1509 **3012** 4 P 1509 **4012**	3P 2998 **0033**(8) 4P 2998 **0034**(8)
	4 P	46AC **9013**								
160 A / B3	3 P	46AC **7016**								
	4 P	46AC **9016**								
200 A / B3	3 P	46AC **7020**								
	4 P	46AC **9020**								
250 A / B4	3 P	46AC **7025**	J3 type Black 1132 **1111**	S3 type Blue IP65 1433 **3114**	200 mm 1401 **1520** 320 mm 1401 **1532**(1)	4109 **0025**(6)		3 P 2694 **3021**(3)(4) 4 P 2694 **4021**(3)(4)	3 P 1509 **3025** 4 P 1509 **4025**	3P 2998 **0023**(8) 4P 2998 **0024**(8)
	4 P	46AC **9025**								
400 A / B4	3 P	46AC **7040**				4109 **0039**(6)				
	4 P	46AC **9040**								
630 A / B5	3 P	46AC **7063**				4109 **0063**(6)		2694 **3051**(3)(4)	1509 **3063**	3P 2998 **0013**(8)
	4 P	46AC **9063**						2694 **4051**(3)(4)	1509 **4063**	4P 2998 **0014**(8)
800 A / B6	3 P	46AC **7080**	J4 type Black 1142 **1111**(5)	V2 type Black IP65 4199 **7146**	200 mm 2799 **3015** 320 mm 2799 **3018**(1) 450 mm 2799 **3019**(7)	4109 **0080**(6)			3 P 1509 **3080** 4 P 1509 **4080**	Included
	4 P	46AC **9080**								
1250 A / B6	3 P	46AC **7120**				4109 **0120**(6)				
	4 P	46AC **9120**								
1600 A / B7	3 P	46AC **7160**				4109 **0160**(6)			1509 **3160**	
	4 P	46AC **9160**							1509 **4160**	

(1) Standard
(2) 2 contacts supplied: one for position I and one for position II.
(3) For complete shrouding at front, rear, top and bottom, order quantity 6; if equipped with bridging bars order quantity 4.
(4) For top and bottom shrouding for the front only, order quantity 2.
(5) Double lever handle.
(6) For a 3-pole device order quantity 6 bridging bars. For a 4-pole device order quantity 8.
(7) Shaft guide : reference 1429 0000 for shafts longer than 320 mm.
(8) A 3-pole reference contains 2 screens, a 4-pole reference contains 3.

Operating principle

SIRCOVER Bypass I-I+II-II

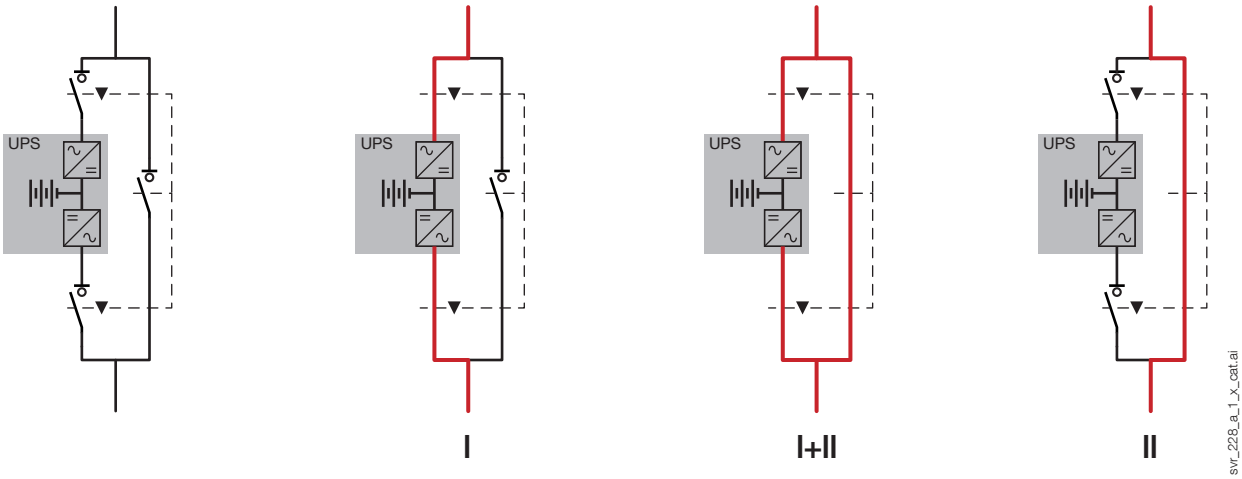

Warning: Please note that in I+II position there is contact overlapping.
If a UPS is present, make sure it is operating in static bypass mode before use.

Accessories

Direct operation handle

SIRCOVER I-0-II and I-I+II-II

Rating (A)	Frame size	Handle colour	Handle type	Reference
125 … 630	B3 ... B5	Blue	J2	1122 **1111**
125 … 630	B3 ... B5	Red	J2	1123 **1111**
800 … 1600	B6 … B7	Blue	J3	1132 **1111**
2000 … 3200	B8	Black	S5	2799 **7042**(1)

SIRCOVER Bypass

Rating (A)	Frame size	Handle colour	Handle type	Reference
125 … 200	B3	Blue	J2	1122 **1111**
250 … 630	B4 … B5	Blue	J3	1132 **1111**
800 … 1600	B6 … B7	Blue	J4	1142 **1111**(1)

(1) Double lever handle.

J2-type handle

J3-type handle

J4-type handle

External operation handle

Use

Door interlocked external front operation handles include an escutcheon, are padlockable and must be used with an extension shaft

SIRCOVER I-0-II and I-I+II-II

Rating (A)	Frame size	Switch operation	External IP	Handle type	Reference
125 … 630	B3 ... B5	I - 0 - II	IP55(1)	S2	1421 **2113**
125 … 630	B3 ... B5	I - 0 - II	IP65(1)	S2	1423 **2113**
125 … 630	B3 ... B5	I - I+II - II	IP65(1)	S2	1423 **2114**
800 … 1600	B6 … B7	I - 0 - II	IP65(1)	S4	1443 **3113**(2)
800 … 1600	B6 … B7	I - I+II - II	IP65(1)	S4	1443 **3114**(2)
2000 … 3200	B8	I - 0 - II	IP65(1)	S5	1453 **8113**(2)

(1) IP: Ingress Protection rating according to IEC 60529.
(2) Double lever handle.

SIRCOVER Bypass

Rating (A)	Frame size	Switch operation	External IP	Handle type	Reference
125 … 200	B3	I - 0 - II	IP55(1)	S2	1421 **2113**
125 … 200	B3	I - 0 - II	IP65(1)	S2	1423 **2113**
250 … 630	B4 … B5	I - 0 - II	IP65(1)	S3	1433 **3113**
800 … 1600	B6 … B7	I - 0 - II	IP65(1)	V2	4199 **7146**

(1) IP: Ingress Protection rating according to IEC 60529.

Handle type S2

Handle type S3

Handle type S4

Handle type S5

Accessories (continued)

Alternative colour S-type handle cover

Use
For single lever handle types S1, S2, S3 and double lever handle type S4.

Other colours available:
please contact us.

Colour	To be ordered in multiples of	Handle type	Reference
Light grey	50	S2, S3	1401 **0001**
Dark grey	50	S2, S3	1401 **0011**
Light grey	50	S4	1401 **0031**
Dark grey	50	S4	1401 **0041**

S-type handle adaptor

Use
Enables S-type handles to be fitted in place of existing older style Socomec handles. This adaptor can also be utilised as a spacer to increase the distance between the panel door and handle.

Dimensions
Adds 12 mm to the handle depth.

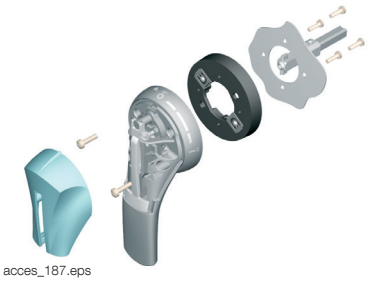

Colour	To be ordered in multiples of	External IP	Reference
Black	1	IP65[1]	1493 **0000**

(1) IP: Ingress Protection rating according to IEC 60529.

S-type handle adaptor

Use
Use with S-type handles to guide the shaft extension into the external handle.
This accessory enables the handle to engage the extension shaft with a misalignment of up to 15 mm.
Recommended for shaft lengths over 320 mm.

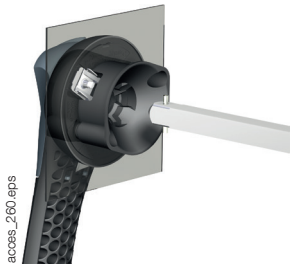

Description	Reference
Shaft guide	1429 **0000**

Accessories (continued)

Shaft guide for external operation

Use
Standard lengths:
- 200 mm,
- 320 mm,
- 450 mm.

Other lengths available:
please contact us.

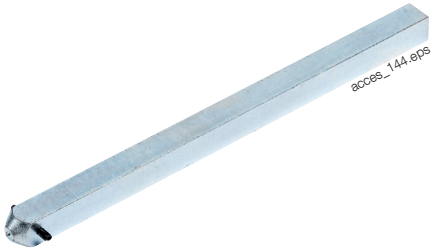

SIRCOVER I-0-II and I-I+II-II

Rating (A)	Frame size	Length (mm)	Side X (mm)	Reference
125 … 400	B3 … B4	200	210 … 310	1400 **1020**
125 … 400	B3 … B4	320	210 … 430	1400 **1032**
500 … 630	B5	200	280 … 390	1400 **1020**
500 … 630	B5	320	280 … 510	1400 **1032**
800 … 1600	B6 … B7	200	425 … 577	1401 **1520**
800 … 1600	B6 … B7	320	425 … 697	1401 **1532**
2000 … 3200	B8	200	653 ... 803	2799 **3015**
2000 … 3200	B8	320	653 … 923	2799 **3018**
2000 … 3200	B8	450	653 … 1053	2799 **3019**

SIRCOVER Bypass

Rating (A)	Frame size	Length (mm)	Side X (mm)	Reference
125 … 200	B3	200	320 … 450	1400 **1020**
125 … 200	B3	320	320 … 570	1400 **1032**
250 … 400	B4	200	298 … 420	1401 **1520**
250 … 400	B4	320	298 … 540	1401 **1532**
630	B5	200	417 … 539	1401 **1520**
630	B5	320	417 … 659	1401 **1532**
800 … 1600	B6 … B7	200	550 ... 680	2799 **3015**
800 … 1600	B6 … B7	320	550 … 800	2799 **3018**
800 … 1600	B6 … B7	450	550 … 930	2799 **3019**

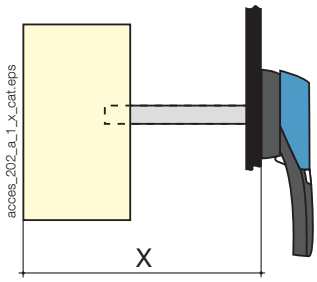

Bridging bars

Use
For creating a common connection between switches I & II, on the top or bottom side of the SIRCOVER, to enable, for example, the load to be fed from either incoming source (I or II).

For SIRCOVER Bypass twice the quantity of bridging bars are required (6 for 3-pole device and 8 for 4-pole).

Rating (A)	Frame size	Diameter (mm)	Reference
125 … 200	B3	20 x 2.5	4109 **0019**(1)
250	B4	25 x 2.5	4109 **0025**(1)
315 … 400	B4	32 x 5	4109 **0039**(1)
500	B5	32 x 5	4109 **0050**(1)
630	B5	50 x 5	4109 **0063**(1)
800 … 1000	B6	50 x 6	4109 **0080**(1)
1250	B6	60 x 8	4109 **0120**(1)
1600	B7	90 x 10	4109 **0160**(1)

(1) SIRCOVER: For a 3-pole device order quantity 3 bridging bars.
For a 4-pole device order quantity 4.
SIRCOVER Bypass: For a 3-pole device order quantity 6 bridging bars.
For a 4-pole device, order quantity 8.

SIRCOVER I-0-II and ***SIRCOVER*** I-I+II-II

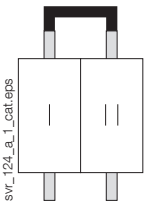

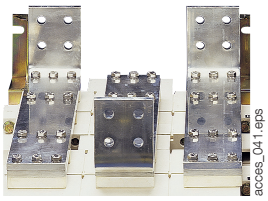

SIRCOVER Bypass

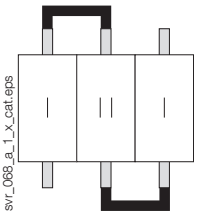

Accessories (continued)

Copper bar connection pieces

Use
For ratings 2000 to 3200 A.
Enable:
- Flat connection: the connection pieces provide a link between the two power terminals of the same pole (Fig. 1).
- Edgewise connection: the connection pieces provide a link between the two power terminals of the same pole and an edgewise bar connection terminal.
- Top or bottom bridging between two poles (Fig. 3).

Once installed, the power terminal is connection ready.

For 3200 A rating, connection pieces (part A) are supplied as standard.
Bolt sets must be ordered separately.

Connection:
the quantities given in the table below refer to the number of pieces required per pole, top or bottom.
Bridging connection: the quantities given in the table below refer to the number of pieces required to complete a single bridging connection between two poles.

Fig. 1

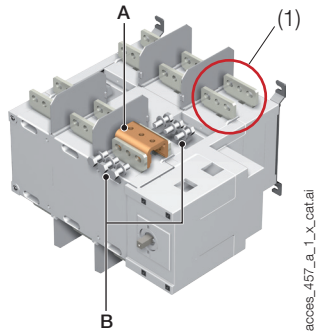

(1) Single pole connection: 1 pole (top or bottom) comprises two power terminals which are to be linked with the copper connection kit.

	Reference	2000 - 2500 A			3200 A		
		Fig. 1	Fig. 2	Fig. 3	Fig. 1	Fig. 2	Fig. 3
		Connection		Bridging connection I - II	Connection		Bridging connection I - II
		Flat	Edgewise		Flat	Edgewise	
Connection - part A	2619 **1200**	1	1	2(2)	included	included	included
Bolt kit 35 mm - part B	2699 **1201**	1(1)		2(2)	1(1)		2(2)
Bolt kit 45 mm - part B	2699 **1200**	1(1)			1(1)		
T + Bolt kit - part C	2629 **1200**		1	1		1	1
Bracket + Bolt kit - part D	2639 **1200**		1			1	
Bar + Bolt kit - part E	4109 **0320**			1			1

(1) Choose the bolt length according to the thickness of the bars being connected; if bar thickness is greater than 20 mm, 45 mm bolts are required.
(2) For bridging connections, quantity 2 pieces are required for creating the link between the two power terminals of the same pole for switch bodies I and II.

Fig. 2

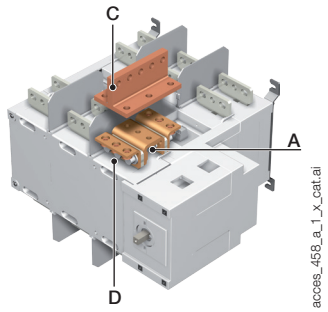

Fig. 3

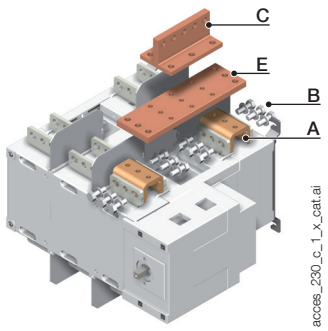

The quantities of the applicable pieces then need to be multiplied by the number of connection points (power terminals) in order to determine the total quantity required of each part.
Example: for a 4 pole 2500 A **SIRCOVER** with upstream edgewise connection (Fig. 2) and downstream bridging (Fig. 3), the following quantities will be required:

Part	Upstream edgewise quantity	Downstream bridging quantity	Total quantity
A	8	8	16
B	0	8	8
C	8	4	12
D	8	0	8
E	0	4	4

Copper bar connection pieces

Use
Pre-breaking and signalling of positions I and II: 1 to 2 NO/NC auxiliary contacts in each position.
Low level AC: please contact us.

Connection to the control circuit
By 6.35 mm fast-on terminal.

Electrical characteristics
30,000 operations.

Characteristics

Rating (A)	Frame size	Rated current (A)	Operating current I_e (A)			
			250 VAC AC-13	400 VAC AC-13	24 VDC DC-13	48 VDC DC-13
125 … 3200	B3... B8	16	12	8	14	6

NO/NC changeover contact

Rating (A)	Frame size	Contact(s)	Reference
125 … 1600	B3 … B7	1st / 2nd	4109 **0021**
2000 … 3200	B8	1st / 2nd	included

svr_058_a_1_cat.eps

acces_065.eps

Accessories (continued)

Terminal shrouds

Use
Protection against direct contact with terminals or connecting parts.

Advantage
Perforations allow remote thermographic inspection without the need to remove the shrouds.

Rating (A)	Frame size	No. of poles	Position	Reference
125 … 200	B3	3 P	top / bottom / front (I) / rear (II)	2694 **3014**(1)(2)
125 … 200	B3	4 P	top / bottom / front (I) / rear (II)	2694 **4014**(1)(2)
250 … 400	B4	3 P	top / bottom / front (I) / rear (II)	2694 **3021**(1)(2)
250 … 400	B4	4 P	top / bottom / front (I) / rear (II)	2694 **4021**(1)(2)
500 … 630	B5	3 P	top / bottom / front (I) / rear (II)	2694 **3051**(1)(2)
500 … 630	B5	4 P	top / bottom / front (I) / rear (II)	2694 **4051**(1)(2)

(1) For complete shrouding at front, rear, top and bottom, order 4 x for a SIRCOVER and 6 x for a SIRCOVER Bypass; if equipped with bridging bars order 3 x for a SIRCOVER and 4 x for a SIRCOVER Bypass.
(2) For top and bottom shrouding for the front only, order 2 x for a SIRCOVER and a SIRCOVER Bypass.

acces_206.psd

Terminal screens

Use
Provide additional upstream and downstream protection against direct contact with terminals or connection parts. For upstream and downstream protection, order quantity 1.

Rating (A)	Frame size	No. of poles	Position	Reference
125 … 200	B3	3 P	top/bottom	1509 **3012**
125 … 200	B3	4 P	top/bottom	1509 **4012**
250 … 400	B4	3 P	top/bottom	1509 **3025**
250 … 400	B4	4 P	top/bottom	1509 **4025**
500 … 630	B5	3 P	top/bottom	1509 **3063**
500 … 630	B5	4 P	top/bottom	1509 **4063**
800 … 1250	B6	3 P	top/bottom	1509 **3080**
800 … 1250	B6	4 P	top/bottom	1509 **4080**
1600	B7	3 P	top/bottom	1509 **3160**
1600	B7	4 P	top/bottom	1509 **4160**
2000 … 3200	B8	3/4 P	top/bottom	included

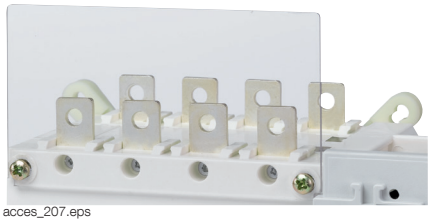
acces_207.eps

Inter-phase barrier

Use
Safety isolation between the terminals, essential for use at 690 VAC or in a polluted or dusty atmosphere.

Rating (A)	Frame size	No. of poles	Reference
125 … 200	B3	3 P	2998 **0033**
125 … 200	B3	4 P	2998 **0034**
250 … 400	B4	3 P	2998 **0023**
250 … 400	B4	4 P	2998 **0024**
500 … 630	B5	3 P	2998 **0013**
500 … 630	B5	4 P	2998 **0014**
800 … 3200	B6 … B8	3/4 P	included

Accessories (continued)

Key handle interlocking system

Use
Padlocking (padlock not included). This device is factory mounted in the direct or external operation handle and allows the use of up to 3 padlocks.

Padlocking:
- using lock (not supplied),
- using undervoltage coil.

The interlocking positions are either determined as standard or configured by the user by removing the pre-form tabs. Padlocking and locking can be combined.

Fig. 1

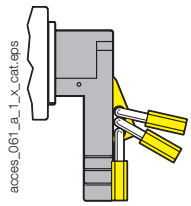

Padlocking in position I, 0 or II

SIRCOVER Rating (A) / Frame size	SIRCOVER Bypass Rating (A) / Frame size	Operating handle	Figure	Reference
125 … 630 / B3 ... B5	125 … 200 / B3	external	1	1423 **2813**

Locking using RONIS EL11AP lock in position 0 (not included)

Fig. 2

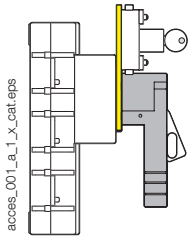

SIRCOVER Rating (A) / Frame size	SIRCOVER Bypass Rating (A) / Frame size	Operating handle	Figure	Reference
125 … 630 / B3 … B5	125 … 200 / B3	direct	2	4109 **1006**(1)
	250 … 630 / B4 ... B5	direct	3	contact us
800 … 1600 / B6 … B7	800 … 1600 / B6 ... B7	direct	3	4109 **1004**(2)
2000 … 3200 / B8		direct	3	4109 **2007**(2)
125 … 630 / B3 … B5	125 … 630 / B3 … B5	external	4	1499 **7701**(2)
2000 … 3200 / B8	800 … 1600 / B6 … B7	external	4	2799 **7002**(2)

(1) Specific handle included.
(2) This locking facility can be configured by the user in the 3 positions.

Locking using RONIS EL11AP lock in position I, 0 or II (not included)

Fig. 3

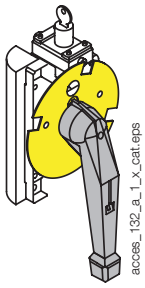

SIRCOVER Rating (A) / Frame size	SIRCOVER Bypass Rating (A) / Frame size	Operating handle	Figure	Reference
125 … 630 / B3 … B5	125 … 200 / B3	direct	2	4109 **1002**(1)
	250 … 630 / B4 … B5	direct	3	contact us
800 … 1600 / B6 … B7	800 … 1600 / B6 … B7	direct	3	4109 **1004**
2000 … 3200 / B8		direct	3	4109 **2007**
125 … 630 / B3 … B5	125 … 630 / B3 … B5	external	4	1499 **7701**
2000 … 3200	800 … 1600 / B6 … B7	external	4	2799 **7002**

(1) Specific handle included.

Locking using 230 VAC undervoltage coil in position 0 (factory fitted)

Fig. 4

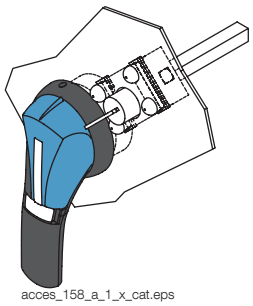

SIRCOVER Rating (A) / Frame size	SIRCOVER Bypass Rating (A) / Frame size	Operating handle	Figure	Reference
800 … 3200 / B6 … B8	800 … 1600 / B6 … B7	direct	3	contact us

Locking using Type K CASTELL lock (not supplied)

SIRCOVER Rating (A) / Frame size	SIRCOVER Bypass Rating (A) / Frame size	Operating handle	Figure	Reference
125 … 1600 / B3 … B7	125 … 630 / B3 … B5	external	4	1499 **7702**
2000 … 3200 / B8	800 … 1600 / B6 … B7	external	4	2799 **7003**

Other specific accessories

bd_03_01_01.ai

- Customised protection screens (for specific dimensions or high ambient temperatures).
- Connection accessories.
- Low level auxiliary contacts.

Characteristics according to IEC 60947-3 and IEC 60947-6-1

125 to 630 A

Thermal current I_{th} at 40 °C		125 A	160 A	200 A	250 A	315 A	400 A	500 A	630 A
Frame size		**B3**	**B3**	**B3**	**B4**	**B4**	**B4**	**B5**	**B5**
Rated insulation voltage U_i (V)		800	800	800	1000	1000	1000	1000	1000
Rated impulse withstand voltage U_{imp} (kV)		8	8	8	12	12	12	12	12
Rated operational currents I_e (A) according to IEC 60947-6-1									
Rated voltage	**Utilisation category**	**A/B(1)**	**A/B(1)**	**A/B(1)**	**A/B(1)**	**A/B(1)**	**A/B(1)**	**A/B(1)**	**A/B(1)**
415 VAC	AC-31 B	125	160	200	250	315	400	500	630
415 VAC	AC-32 B				200	315	400	500	500
415 VAC	AC-33 B				200	200	200	400	400
Rated operational currents I_e (A) according to IEC 60947-3									
Rated voltage	**Utilisation category**	**A/B(1)**	**A/B(1)**	**A/B(1)**	**A/B(1)**	**A/B(1)**	**A/B(1)**	**A/B(1)**	**A/B(1)**
415 VAC	AC-21 A / AC-21 B	125/125	160/160	200/200	250/250	315/315	400/400	500/500	630/630
415 VAC	AC-22 A / AC-22 B	125/125	160/160	200/200	250/250	315/315	400/400	500/500	630/630
415 VAC	AC-23 A / AC-23 B	125/125	160/160	200/200	200/200	315/315	400/400	500/500	500/630
500 VAC	AC-21 A / AC-21 B	125/125	160/160	200/200	250/250	315/315	400/400	500/500	630/630
500 VAC	AC-22 A / AC-22 B	125/125	160/160	200/200	200/250	200/315	200/400	500/500	500/500
500 VAC	AC-23 A / AC-23 B	80/80	80/80	80/80	200/200	200/200	200/200	400/400	400/400
690 VAC(3)	AC-21 A / AC-21 B	125/125	160/160	200/200	200/200	200/200	200/200	500/500	500/500
690 VAC (3)	AC-22 A / AC-22 B	125/125	125/125	125/125	160/160	160/160	160/160	400/400	400/400
690 VAC (3)	AC-23 A / AC-23 B	63/80	63/80	63/80	125/125	125/125	125/125	400/400	400/400
220 VDC	DC-21 A / DC-21 B	125/125	160/160	200/200	250/250	250/250	250/250	500/500	630/630
220 VDC	DC-22 A / DC-22 B	125/125	160/160	200/200	250/250	250/250	250/250	500/500	630/630
220 VDC	DC-23 A / DC-23 B	125/125	125/125	125/125	200/200	200/200	200/200	500/500	630/630
440 VDC (2)	DC-21 A / DC-21 B	125/125	125/125	125/125	200/200	200/200	200/200	500/500	630/630
440 VDC (2)	DC-22 A / DC-22 B	125/125	125/125	125/125	200/200	200/200	200/200	500/500	630/630
440 VDC (2)	DC-23 A / DC-23 B	125/125	125/125	125/125	200/200	200/200	200/200	500/500	630/630
Operational power in AC-23 (kW)(4)									
At 415 VAC without pre-break auxiliary contact		58/58	75/75	100/100	100/100	145/145	190/190	235/235	235/280
At 690 VAC without pre-break AC		50/62	50/62	50/62	90/90	90/90	90/90	310/310	310/310
Reactive power (kvar) (4)									
At 415 VAC (kvar)		60/60	75/75	100/100	125/125	150/150	200/200	250/250	250/300
Fuse protected short-circuit withstand as per IEC 60947-3 (kA rms prospective)									
Prospective short-circuit current with gG DIN fuses at 415 VAC (kA rms)		100	100	50	50	50	50	50	50
Prospective short-circuit current with gG DIN fuses at 690 VAC (kA rms)					50	50	50	50	50
Associated fuse rating (A)		125	160	200	250	315	400	500	630
Short-circuit withstand without protection as per IEC 60947-3									
Rated short-time withstand current 0.3 s I_{cw} at 415 VAC (kA rms)		12	12	12	15 (5)	15 (5)	15 (5)	17 (5)	17 (5)
Rated short-time withstand current 1 s I_{cw} at 415 VAC (kA rms)		7	7	7	8 (5)	8 (5)	8 (5)	11 (5)	10 (5)
Rated peak withstand current at 415 VAC (kA peak)		20	20	20	30	30	30	45	45
Short-circuit withstand without protection as per IEC 60947-6-1									
Rated short-time withstand current 30 ms I_{cw} at 415 VAC (kA rms)		10	10	10	10	10	10		
Rated short-time withstand current 60 ms I_{cw} at 415 VAC (kA rms)								10	12.6
Connection									
Minimum Cu cable cross-section as per IEC 60947-1 (mm²)		35	35	50	95	120	185	2 x 95	2 x 120
Recommended Cu busbar cross-section (mm²)								2 x 32 x 5	2 x 40 x 5
Maximum Cu cable cross-section (mm²)		50	95	120	150	240	240	2 x 185	2 x 300
Maximum Cu busbar width (mm)		25	25	25	32	32	32	50	50
Min./Max. tightening torque (Nm)		9/13	9/13	9/13	20/26	20/26	20/26	20/26	20/26
Mechanical characteristics									
Durability (number of operating cycles)		10,000	10,000	10,000	8,000	8,000	8,000	5,000	5,000
Weight 3P (kg)		2.9	2.9	2.9	3.8	3.9	3.9	8.6	9.1
Weight 4P (kg)		4.1	4.1	4.1	4.6	4.9	4.9	10.4	11.1

(1) Category with index A = frequent operation / Category with index B = infrequent operation.
(2) 3-pole device with 2 poles in series for the '+' and 1 pole for the '-', 4-pole device with 2 poles in series per polarity.
(3) Interphase barriers must be fitted on the products.
(4) The power value is given for information only, the values vary from one manufacturer to another.
(5) Values given at 690 VAC.

Characteristics according to IEC 60947-3 and IEC 60947-6-1

800 to 3200 A

Thermal current I_{th} at 40 °C		800 A	1000 A	1250 A	1600 A	2000 A	2500 A	3200 A
Frame size		**B6**	**B6**	**B6**	**B7**	**B8**	**B8**	**B8**
Rated insulation voltage U_i (V)		1000	1000	1000	1000	1000	1000	1000
Rated impulse withstand voltage U_{imp} (kV)		12	12	12	12	12	12	12
Rated operational currents I_e (A) according to IEC 60947-6-1								
Rated voltage	**Utilisation category**	**A/B(1)**	**A/B(1)**	**A/B(1)**	**A/B(1)**	**A/B(1)**	**A/B(1)**	**A/B(1)**
415 VAC	AC-31 B	800	1000	1250	1600	2000	2500	3200
415 VAC	AC-32 B	800	1000	1250	1250	2000	2000	2000
415 VAC	AC-33 B	800	1000	1000	1000	1250	1250	1250
Rated operational currents I_e (A) according to IEC 60947-3								
Rated voltage	**Utilisation category**	**A/B(1)**	**A/B(1)**	**A/B(1)**	**A/B(1)**	**A/B(1)**	**A/B(1)**	**A/B(1)**
415 VAC	AC-21 A / AC-21 B	800/800	1000/1000	1250/1250	1600/1600	-/2000	-/2500	-/3200
415 VAC	AC-22 A / AC-22 B	800/800	1000/1000	1250/1250	1600/1600	-/2000	-/2500	-/3200
415 VAC	AC-23 A / AC-23 B	800/800	1000/1000	1250/1250	1250/1250	-/1600	-/1600	-/1600
500 VAC	AC-21 A / AC-21 B	800/800	1000/1000	1250/1250	1600/1600	-/2000	-/2000	-/2000
500 VAC	AC-22 A / AC-22 B	630/630	800/800	1000/1000	1600/1600			
500 VAC	AC-23 A / AC-23 B	630/630	630/630	800/800	1000/1000			
690 VAC(3)	AC-21 A / AC-21 B	800/800	1000/1000	1250/1250	1600/1600	-/2000	-/2000	-/2000
690 VAC (3)	AC-22 A / AC-22 B	630/630	800/800	1000/1000	1000/1000			
690 VAC (3)	AC-23 A / AC-23 B	630/630	630/630	800/800	800/800			
220 VDC	DC-21 A / DC-21 B	800/800	1000/1000	1250/1250	1250/1250			
220 VDC	DC-22 A / DC-22 B	800/800	1000/1000	1250/1250	1250/1250			
220 VDC	DC-23 A / DC-23 B	800/800	1000/1000	1250/1250	1250/1250			
440 VDC (2)	DC-21 A / DC-21 B	800/800	1000/1000	1250/1250	1250/1250			
440 VDC (2)	DC-22 A / DC-22 B	800/800	1000/1000	1250/1250	1250/1250			
440 VDC (2)	DC-23 A / DC-23 B	800/800	1000/1000	1250/1250	1250/1250			
Operational power in AC-23 (kW)(4)								
At 415 VAC without pre-break auxiliary contact		375/375	450/450	560/560	560/560	-/710	-/710	-/710
At 690 VAC without pre-break AC		475/475	475/475	620/620	620/620			
Reactive power (kvar) (4)								
At 415 VAC (kvar)		400/400	500/500	650/650	650/650	-/850	-/850	-/850
Fuse protected short-circuit withstand as per IEC 60947-3 (kA rms prospective)								
Prospective short-circuit current with gG DIN fuses at 415 VAC (kA rms)		50	50	100	100			
Prospective short-circuit current with gG DIN fuses at 690 VAC (kA rms)		50	50	50				
Associated fuse rating (A)		800	1000	1250	2x800			
Short-circuit withstand without protection as per IEC 60947-3								
Rated short-time withstand current 0.3 s I_{cw} at 415 VAC (kA rms)		64	64	64	78	78	78	78
Rated short-time withstand current 1 s I_{cw} at 415 VAC (kA rms)		35	35	35	50	50	50	50
Rated peak withstand current at 415 VAC (kA peak)		55	55	80	110	120	120	120
Short-circuit withstand without protection as per IEC 60947-6-1								
Rated short-time withstand current 30 ms I_{cw} at 415 VAC (kA rms)								
Rated short-time withstand current 60 ms I_{cw} at 415 VAC (kA rms)		20	20	25	32	50	50	50
Connection								
Minimum Cu cable cross-section as per IEC 60947-1 (mm²)		2 x 185						
Recommended Cu busbar cross-section (mm²)		2 x 50 x 5	2 x 63 x 5	2 x 60 x7	2 x 100 x 5	3 x 100 x 5	2 x 100 x 10	3 x 10 x 100
Maximum Cu cable cross-section (mm²)		4 x 185	4 x 185	4 x 185	6 x 185			
Maximum Cu busbar width (mm)		63	63	63	100	100	100	100
Min./Max. tightening torque (Nm)		20/26	20/26	20/26	40/45	40/45	40/45	40/45
Mechanical characteristics								
Durability (number of operating cycles)		4,000	4,000	4,000	3,000	3,000	3,000	3,000
Weight 3P (kg)		20.5	21.0	21.6	25.7	42.0	42.0	52.3
Weight 4P (kg)		24.8	25.6	26.2	32.0	52.9	52.9	66.6

(1) Category with index A = frequent operation / Category with index B = infrequent operation.
(2) 3-pole device with 2 poles in series for the '+' and 1 pole for the '-', 4-pole device with 2 poles in series per polarity.
(3) Interphase barriers must be fitted on the products.
(4) The power value is given for information only, the values vary from one manufacturer to another.
(5) Values given at 690 VAC.

Dimensions

SIRCOVER 125 to 1600 A / B3 to B7

Direct front operation

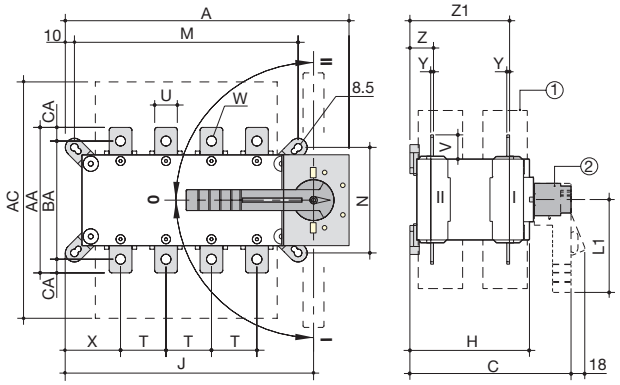

External front operation

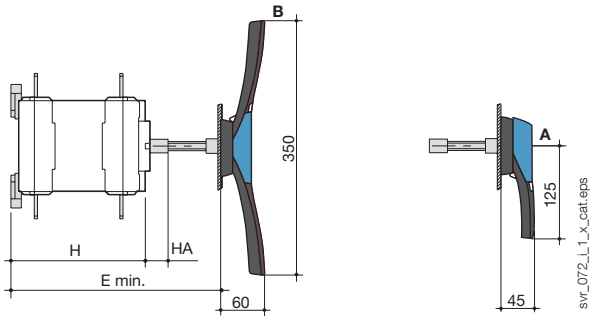

A. S2 type handle for external operation: 125 to 630 A
B. S4 type handle for external operation: 800 to 1600 A

1. Terminal shroud
2. Direct operation handle:
   - 125 to 630 A: L1 = 140 mm,
   - 800 to 1600 A: L1 = 210 mm.

Rating (A) / Frame size	Perimeter dimensions				Terminal shroud	Case				Mounting accessory			Connection											
	A 3p.	A 4p.	C	E min	AC	H	HA	J 3p.	J 4p.	M 3p.	M 4p.	N	T	U	V	W	X 3p.	X 4p.	O	Z	Z1	AA	BA	AC
125 / B3	221	251	218	208 … 436	235	148	25	182	212	156	186	101	36	20	25	8.5	56	50	3.5	28	124	135	115	10
160 / B3	221	251	218	208 … 436	235	148	25	182	212	156	186	101	36	20	25	8.5	56	50	3.5	28	124	135	115	10
200 / B3	221	251	218	208 … 436	235	148	25	182	212	156	186	101	36	20	25	8.5	56	50	3.5	28	124	135	115	10
250 / B4	262	312	218	208 … 436	280	148	25	223	273	196	246	116	50	25	30	11	61	61	3.5	30	124	160	130	15
315 / B4	262	312	218	208 … 436	280	148	25	223	273	196	246	116	50	35	35	11	61	61	3.5	30	124	170	140	15
400 / B4	262	312	218	208 … 436	280	148	25	223	273	196	246	116	50	35	35	11	61	61	3.5	30	124	170	140	15
500 / B5	319	379	295	285 … 513	401	225	25	272	332	246	306	176	65	32	37	13	70.5	65.5	5	43	180	235	205	15
630 / B5	319	379	295	285 … 513	400	225	25	272	332	246	306	176	65	45	50	13	70.5	65.5	5	43	180	260	220	20
800 / B6	386	466	375	425 … 577	459	298	29	306.5	386.5	255	336	250	80	50	60.5	15	48	48	7	66.5	253.5	321		26.5
1000/B6	386	466	375	425 … 577	459	298	29	306.5	386.5	255	336	250	80	50	60.5	15	48	48	7	66.5	253.5	321		26.5
1250 / B6	386	466	375	425 … 577	459	298	29	306.5	386.5	255	336	250	80	60	65	16x11	48	48	7	66.5	255.5	330		29.5
1600/B7	478	598	375	425 … 577	461	298	29	388.5	518.5	347	467	250	120	90	43.5	12.5x5	54	54	8	66.5	255.5	288		15

SIRCOVER 2000 to 3200 A / B8

Direct front operation

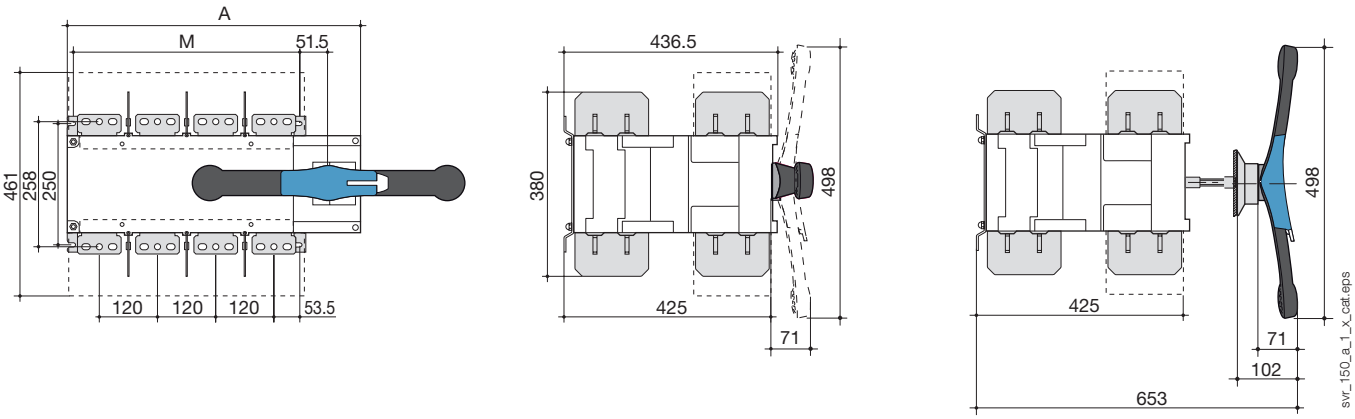

Rating (A) / Frame size	Perimeter dimensions		Mounting accessory	
	A 3p.	A 4p.	M 3p.	M 4p.
2000 … 3200 / B8	478	598	347	467

Dimensions (continued)

SIRCOVER Bypass 125 to 1600 A / B3 to B7

Direct front operation

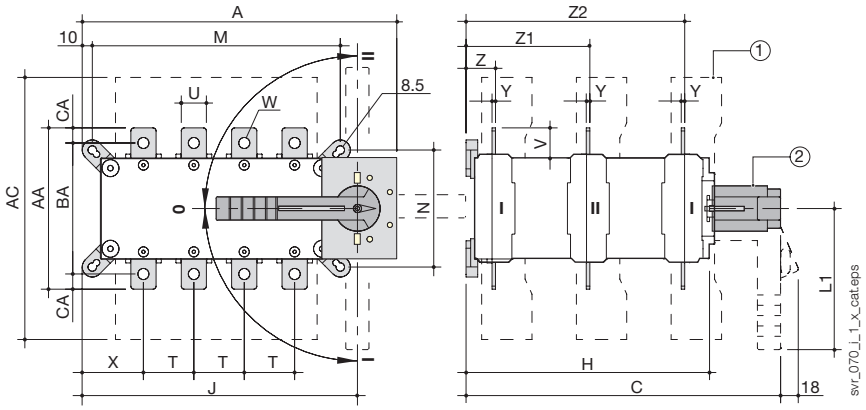

A. S2 type handle for external operation: 125 to 200 A
A. S3 type handle for external operation: 250 to 630 A
C. External double lever handle: 800 to 1600 A

1. Terminal shroud
2. Direct operation handle:
   - 125 to 200 A: L1 = 140 mm,
   - 250 to 630 A: L1 = 210 mm,
   - 800 to 1600 A: L1 = diameter 330 mm.

External front operation

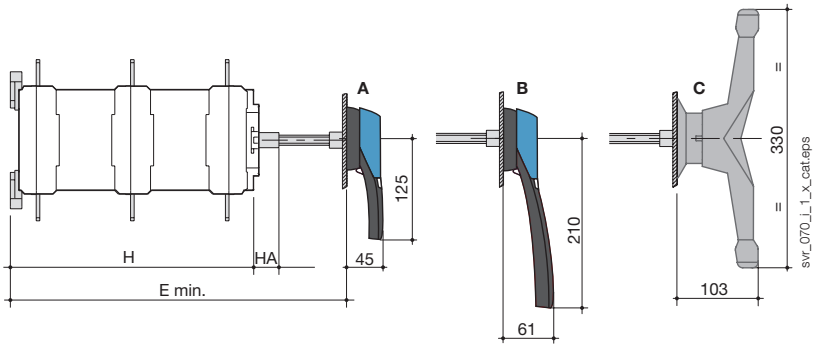

Rating (A) / Frame size	Perimeter dimensions				Terminal shroud	Case				Mounting accessory			Connection												
	A 3+6p.	A 4+8p.	C	E min	AC	H	HA	J 3+6p.	J 4+8p.	M 3+6p.	M 4+8p.	N	T	U	V	W	X 3+6p.	X 4+8p.	O	Z	Z1	Z2	AA	BA	AC
125 / B3	221	251	313	320	235	243	25	182	212	156	186	101	36	20	25	8.5	56	50	3.5	28	124	219	135	115	10
160 / B3	221	251	313	320	235	243	25	182	212	156	186	101	36	20	25	8.5	56	50	3.5	28	124	219	135	115	10
200 / B3	221	251	313	320	235	243	25	182	212	156	186	101	36	20	25	8.5	56	50	3.5	28	124	219	135	115	10
250 / B4	262	312	313	298	280	243	25	223	273	196	246	116	50	25	30	11	61	61	3.5	30	124	219	160	130	10
400 / B4	262	312	313	298	280	243	25	223	273	196	246	116	50	35	35	11	61	61	3.5	30	124	219	170	140	15
630 / B5	319	379	432	417	400	362	25	272	332	246	306	176	65	45	50	13	70.5	65.5	5	43	180	317	260	220	20
800 / B6	386	466	560	550	459	479	29	306.5	386.5	255	335	250	80	50	60.5	15	48	48	7	66.5	253.5	439.5	321		26.5
1250 / B6	386	466	560	550	459	479	29	306.5	386.5	255	335	250	80	60	65	16x11	48	48	7	66.5	253.5	439.5	320		29.25
1600 / B7	478	598	560	550	461	479	29	388.5	518.5	347	467	250	120	90	43.5	12.5x5	54	54	8	66.5	253.5	439.5	288		15

Connection terminals

SIRCOVER and ***SIRCOVER*** Bypass 800 A / B6

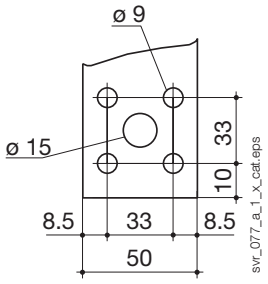

SIRCOVER and ***SIRCOVER*** Bypass 1250 A / B6

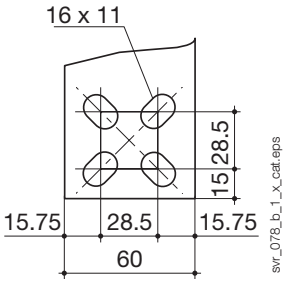

SIRCOVER 1600 to 3200 A / B7 to B8
SIRCOVER Bypass 1600 A / B7

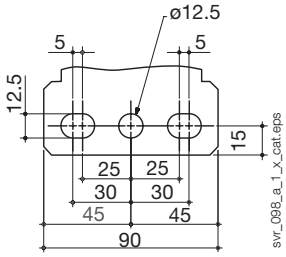

Dimensions for external handles

SIRCOVER 125 to 630 A / B3 to B5

Handle type	Front operation Direction of operation	Door drilling		
S2 type	0 or I+II		With lock RONIS EL11AP	With lock CASTELL K

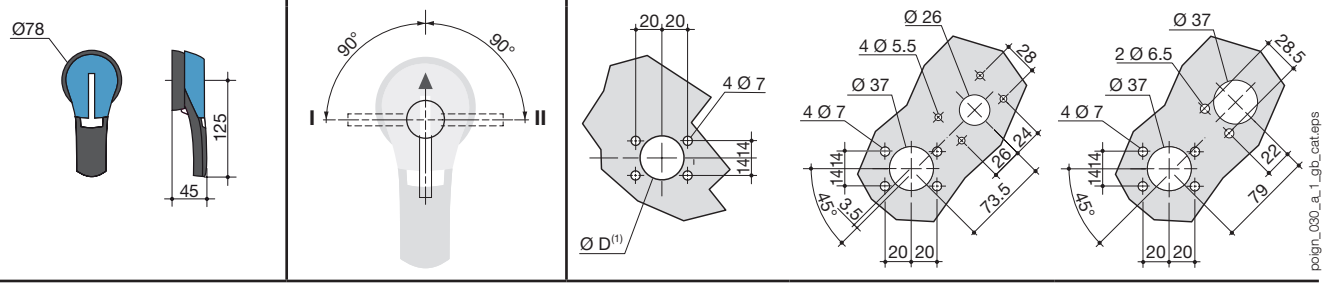

(1) Ø31 to Ø37: rear screw mounting,
Ø37: front clip mounting.

SIRCOVER 800 to 1600 A / B6 to B7

Handle type	Front operation Direction of operation	Door drilling		
S4 type	0 or I+II		With lock RONIS EL11AP	With lock CASTELL K

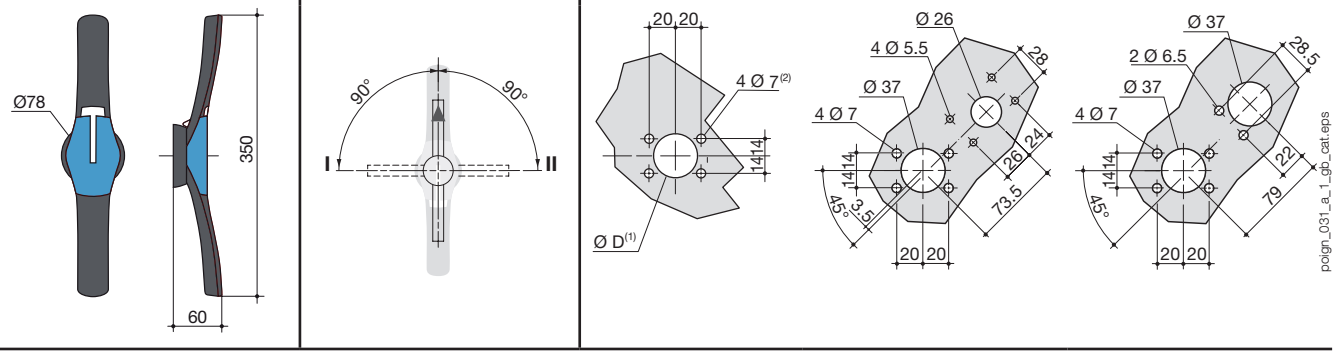

(1) Ø31 to Ø37: rear screw mounting,
Ø37: front clip mounting.
(2) Ø6 to Ø7: clip mounting

SIRCOVER 2000 to 3200 A / B8

Handle type	Front operation Direction of operation	Door drilling
S5 type with V Escutcheon		With lock CASTELL K

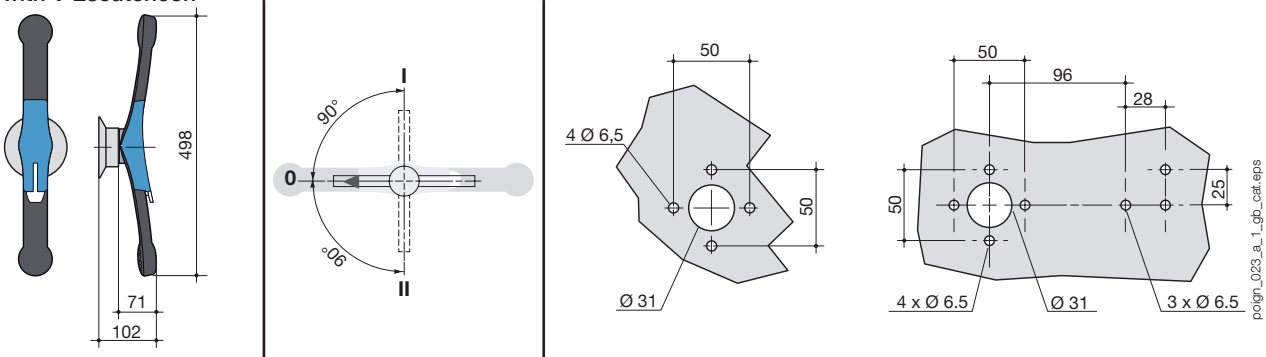

Dimensions for external handles (continued)

SIRCOVER Bypass 125 to 200 A / B3

Handle type	Front operation Direction of operation	Door drilling	
S2 type		With lock RONIS EL11AP	With lock CASTELL K

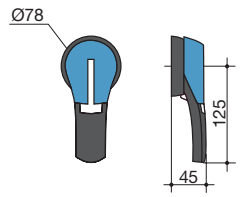

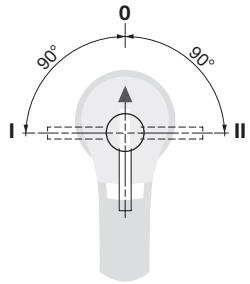

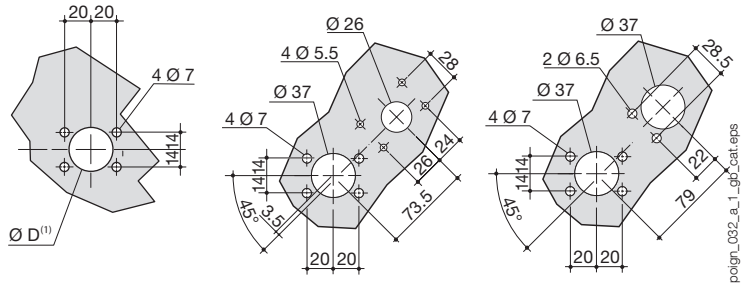

(1) Ø31 to Ø37: rear screw mounting,
Ø37: front clip mounting.

SIRCOVER Bypass 250 to 630 A / B4 to B5

Handle type	Front operation Direction of operation	Door drilling	
S3 type		With lock RONIS EL11AP	With lock CASTELL K

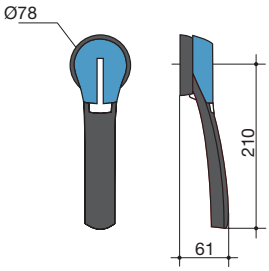

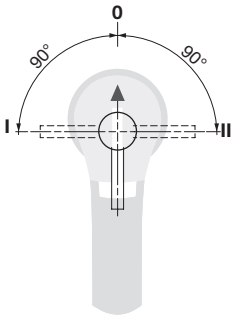

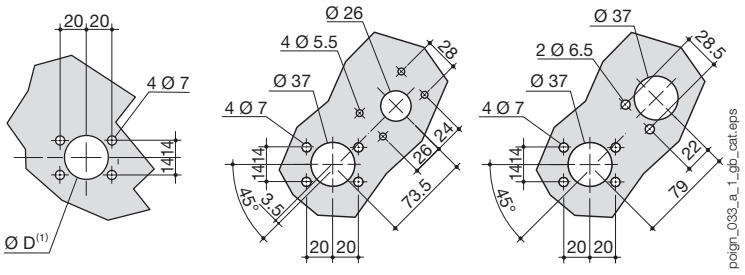

(1) Ø31 to Ø37: rear screw mounting,
Ø37: front clip mounting.

SIRCOVER Bypass 800 to 1600 A / B6 to B7
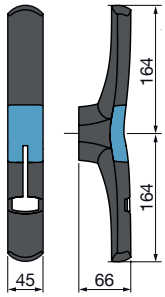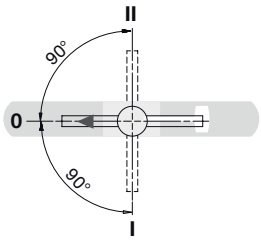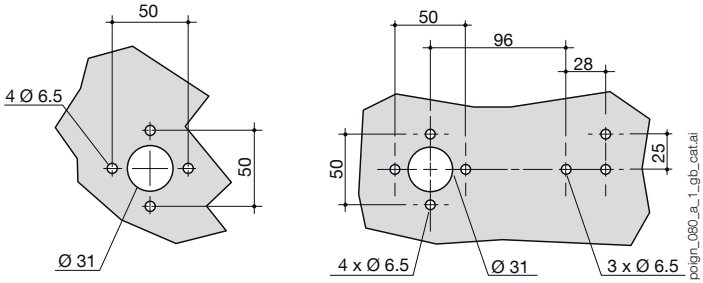
Handle type	Front operation Direction of operation	Door drilling
J4 type		With lock CASTELL K