# Data sheet

## M12 Sensor/actuator cable, A-coded, 2.0 m, M12 jack straight - free line end, unshielded, 8-pole, PVC

**P/N**
**142MKA20020**
**EAN 4251394647159**
2026/09/09
Version: J

## Illustrations

Dimensional drawing

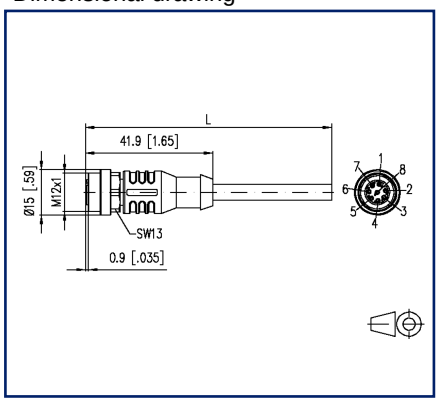


Wiring diagram

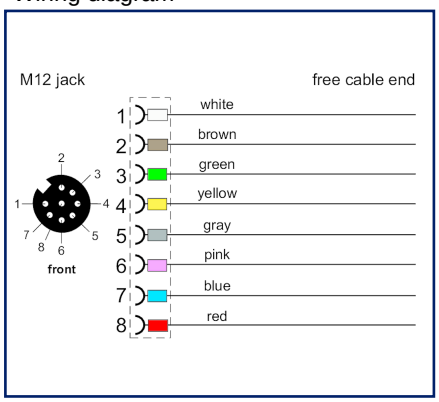


See enlarged drawings at the end of document

## Product specification

PVC-cable for measurement, control and sensor technology. Suitable for applications in dry areas on packaging machines, assembly and conveyor technology. High flexibility with unstressed movement (conditional drag chain application possible). Predestined for applications in food and beverage industry. Special features: seawater resistant, recyclable, LABS free, RoHs compliant, acid and alkali resistant, ozone resistant, UV resistant.

- Standard variants: 1.0 m, 2.0 m, 5.0 m, 10.0 m.
- Other cable lengths on request.

© 2026 METZ CONNECT - Technische Änderungen vorbehalten! Subject to modifications! Sous réserve de modifications techniques!

# M12 Sensor/actuator cable, A-coded, 2.0 m, M12 jack straight - free line end, unshielded, 8-pole, PVC

**P/N**
**142MKA20020**
**EAN 4251394647159**
2026/09/09
Version: J

## Technical Data

| General Data | |
|---|---|
| Fields of application | Industrial Ethernet |
| Design | Sensor/actuator connection cable M12, A-coded |
| Shielding | unshielded |
| Transmission technology | Copper |
| Color coding fiber/ wire(s) | white, brown, green, yellow, gray, pink, blue, red |
| Color | gray |
| Dimensions | |
| Dimension - Interface 1 (L x W x H) | 41.9 mm x 15 mm x 15 mm |
| Dimension - Interface 1 (L x W x H) | 1.65 in. x 0.591 in. x 0.591 in. |
| Cable length (m) | 2 m |
| Cable length (ft) | 6.56 ft |
| Labeling option | identification label carrier |

| Connections/interfaces | |
|---|---|
| Connector technology interface 1 | M12-jack |
| Connector technology interface 2 | free line end |
| Coding interface 1 | A-coded |
| Number of positions/contacts interface 1 | 8 |
| Termination data, stranded wire (min. - max.) | |
| Conductor cross section, stranded wire | AWG 24/14 |
| Conductor cross section, stranded wire | 0.25 mm² |
| Stranded wire structure | 14x0.15mm |
| Cable sheath diameter (min. - max.) | |
| Cable sheath diameter | 5.7 mm |
| Cable sheath diameter | 0.224 in. |

| Electrical characteristics | |
|---|---|
| Current carrying capacity | 2 A at 40 °C |
| Rated voltage | 30 V |
| Insulation resistance | min. 100 MOhm |

© 2026 METZ CONNECT - Technische Änderungen vorbehalten! Subject to modifications! Sous réserve de modifications techniques!

# M12 Sensor/actuator cable, A-coded, 2.0 m, M12 jack straight - free line end, unshielded, 8-pole, PVC

P/N
142MKA20020
EAN 4251394647159
2026/09/09
Version: J

## Technical Data

| Mechanical data | |
|---|---|
| Life - Number of mating cycles | min. 100 |
| Maximum operating bending radius | 57 mm |
| Alternating bending radius | 57 mm |

| Materials and material properties | |
|---|---|
| Cable | |
| Material - Conductor | Cu (copper) |
| Material - Conductor Insulation | PVC |
| Material - Cable jacket | PVC |
| Interface 1 | |
| Material - Body interface 1 | Plastics |
| Material - Protective housing interface 1 | FPM/FKM |
| Material - Contact interface 1 | CuSn |
| Material - Contact finish interface 1 | Au (gold) |
| Material - Contact carriers interface 1 | Plastics |
| Material - Union nut interface 1 | CuZnPb (brass) |
| Material - Union nut finish interface 1 | Ni (nickel) |
| UV-resistance | yes |
| RoHS | compliant |

| Environmental conditions | |
|---|---|
| Temperature (min. - max.) | |
| Temperature - Operating °C | -25 °C - 80 °C |
| Temperature - Operating °F | -13 °F - 176 °F |
| Temperature - Installation °C | 0 °C - 80 °C |
| Temperature - Installation °F | 32 °F - 176 °F |
| Particulate ingress interface 1 | IP6X when plugged in |
| Liquid ingress/immersion interface 1 | IPX5, IPX7, IPX8 when plugged in |
| Pollution degree interface 1 | 3 |

© 2026 METZ CONNECT - Technische Änderungen vorbehalten! Subject to modifications! Sous réserve de modifications techniques!

# M12 Sensor/actuator cable, A-coded, 2.0 m, M12 jack straight - free line end, unshielded, 8-pole, PVC

**P/N**
**142MKA20020**
**EAN 4251394647159**
2026/09/09
Version: J

## Technical Data

| | |
|---|---|
| **Approvals** | |
| UL listed (file no.) | Approval pending |
| **Standards/Regulations** | |
| Connectors for electronic equipment | |
| circular connector | DIN EN 61076-2-101 |
| **Classifications** | |
| ETIM 7.0 | EC001855 |
| ETIM 8.0 | EC001855 |
| ETIM 9.0 | EC001855 |
| ETIM 10.0 | EC001855 |

| | |
|---|---|
| **Packing details** | |
| Type of packaging | 1 pc(s) / plastic bag |

### Application note

This product is a standard product of METZ CONNECT. METZ CONNECT is not aware of the specific intended use of the goods by the Customer or any customers of the Customer. The Customer guarantees that it has fully and sufficiently tested the use of the goods and any product modifications, product changes or product enhancements with regard to the specific intended use in accordance with the state of the art or in any other way.

© 2026 METZ CONNECT - Technische Änderungen vorbehalten! Subject to modifications! Sous réserve de modifications techniques!

**Data sheet**

# M12 Sensor/actuator cable, A-coded, 2.0 m, M12 jack straight - free line end, unshielded, 8-pole, PVC

**P/N**
**142MKA20020**
**EAN 4251394647159**
2026/09/09
Version: J

## Illustrations

Dimensional drawing

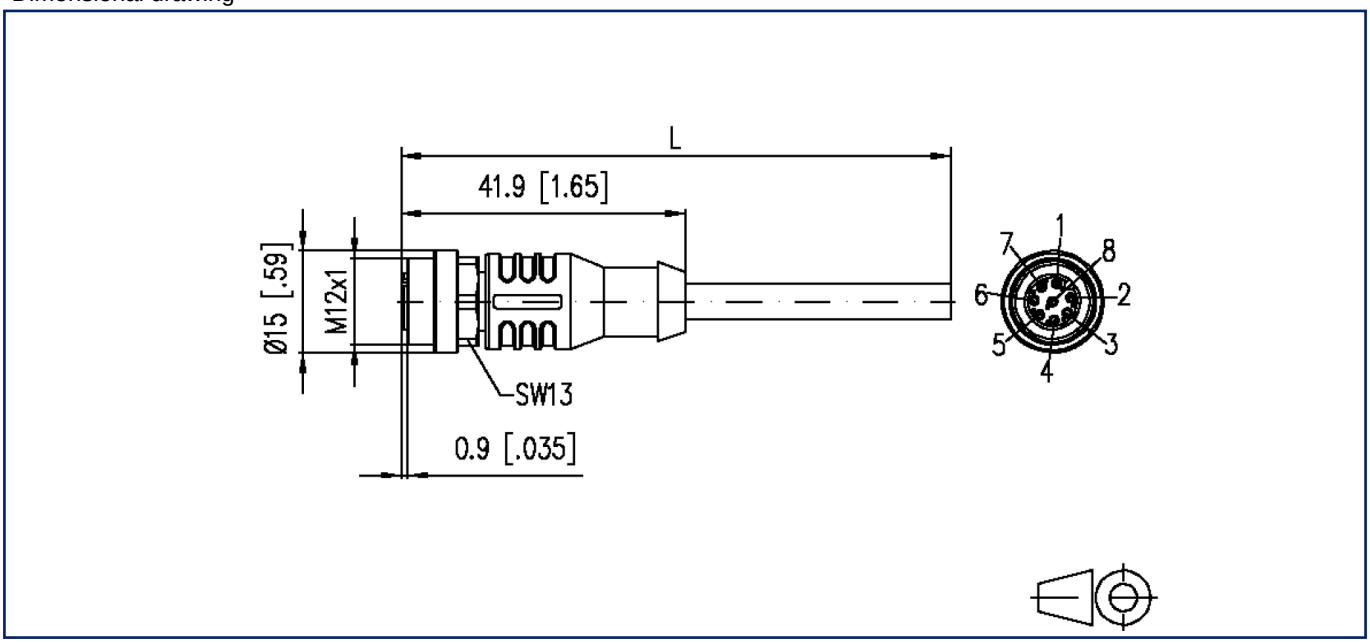


Wiring diagram

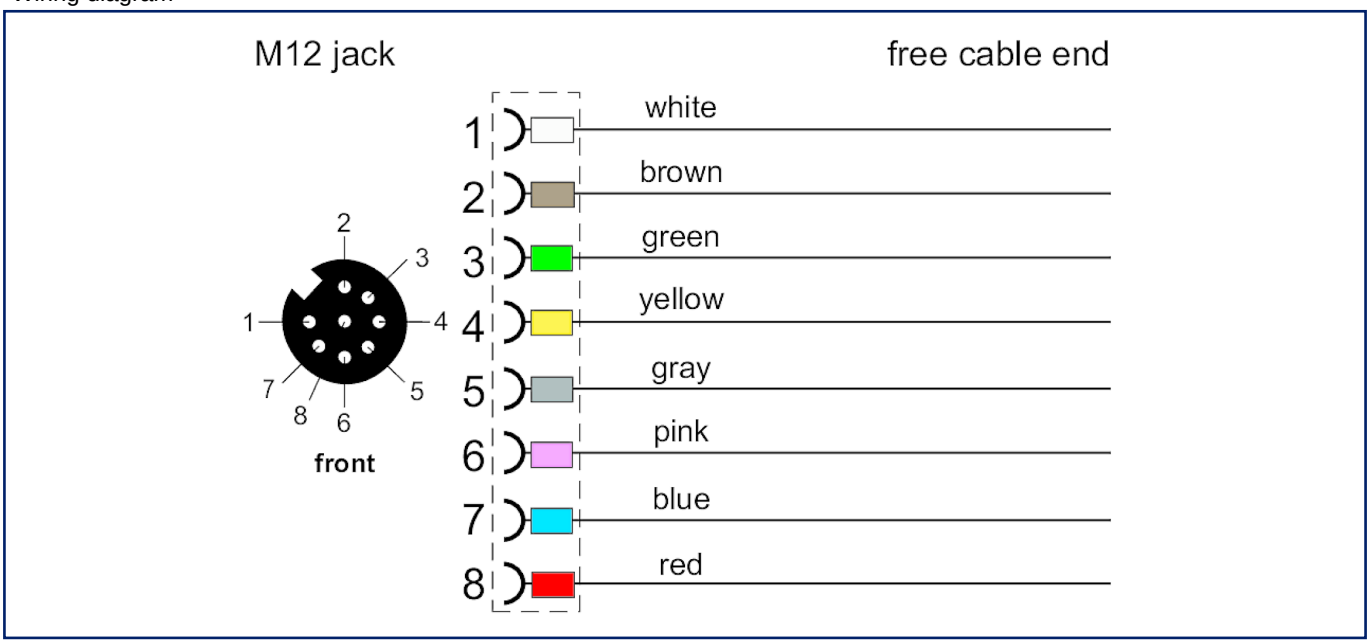


© 2026 METZ CONNECT - Technische Änderungen vorbehalten! Subject to modifications! Sous réserve de modifications techniques!

# M12 Sensor/actuator cable, A-coded, 2.0 m, M12 jack straight - free line end, unshielded, 8-pole, PVC

P/N
142MKA20020
EAN 4251394647159
2026/09/09
Version: J

## Illustrations

Principle diagram

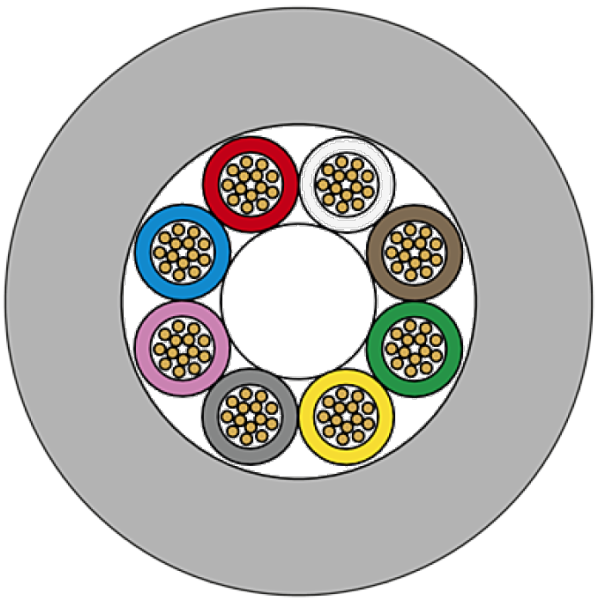

© 2026 METZ CONNECT - Technische Änderungen vorbehalten! Subject to modifications! Sous réserve de modifications techniques!