Data sheet

M12 Sensor/actuator cable, A-coded, 2.0 m, M12 plug straight - M12 plug straight, shielded, 8-pole, PVC-C

P/N
142MNA11020
EAN 4251394647692
2026/09/09
Version: J

Illustrations

Dimensional drawing

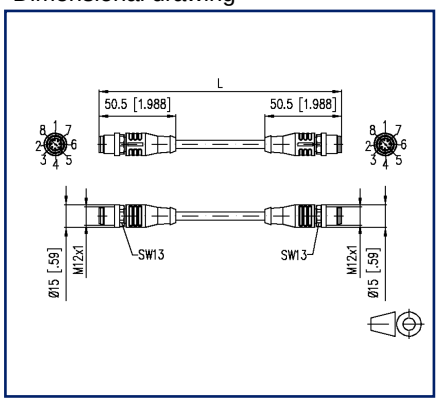

Wiring diagram

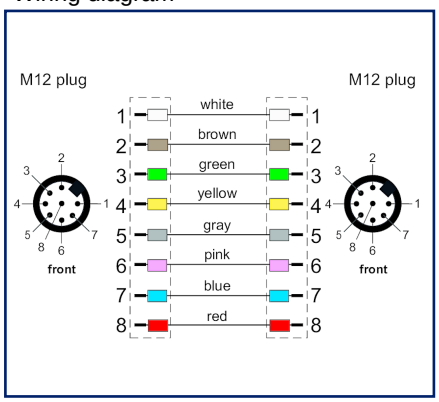

See enlarged drawings at the end of document

Product specification

PVC-cable for measurement, control and sensor technology. Suitable for applications in dry areas on packaging machines, assembly and conveyor technology. High flexibility with unstressed movement (conditional drag chain application possible). Predestined for applications in food and beverage industry. Special features: seawater resistant, recyclable, LABS free, RoHs compliant, acid and alkali resistant, ozone resistant, UV resistant.

- Standard variants: 1.0 m, 2.0 m, 5.0 m, 10.0 m.
- Other cable lengths on request.

© 2026 METZ CONNECT - Technische Änderungen vorbehalten! Subject to modifications! Sous réserve de modifications techniques!

M12 Sensor/actuator cable, A-coded, 2.0 m, M12 plug straight - M12 plug straight, shielded, 8-pole, PVC-C

P/N
142MNA11020
EAN 4251394647692
2026/09/09
Version: J

Technical Data

General Data	
Fields of application	Industrial Ethernet
Design	Sensor/actuator connection line M12, A-coded
Shielding	shielded
Transmission technology	Copper
Color coding fiber/ wire(s)	white, brown, green, yellow, gray, pink, blue, red
Color	gray
Dimensions	
Dimension - Interface 1 (L x W x H)	50.5 mm x 15 mm x 15 mm
Dimension - Interface 1 (L x W x H)	1.988 in. x 0.591 in. x 0.591 in.
Dimension - Interface 2 (L x W x H)	50.5 mm x 15 mm x 15 mm
Dimension - Interface 2 (L x W x H)	1.988 in. x 0.591 in. x 0.591 in.
Cable length (m)	2 m
Cable length (ft)	6.56 ft
Labeling option	identification label carrier

Connections/interfaces	
Connector technology interface 1	M12-plug
Connector technology interface 2	M12-plug
Coding interface 1	A-coded
Coding interface 2	A-coded
Number of positions/contacts interface 1	8
Number of positions/contacts interface 2	8
Termination data, stranded wire (min. - max.)	
Conductor cross section, stranded wire	AWG 24/14
Conductor cross section, stranded wire	0.25 mm²
Stranded wire structure	14x0.15mm
Cable sheath diameter (min. - max.)	
Cable sheath diameter	6.7 mm
Cable sheath diameter	0.264 in.

© 2026 METZ CONNECT - Technische Änderungen vorbehalten! Subject to modifications! Sous réserve de modifications techniques!

M12 Sensor/actuator cable, A-coded, 2.0 m, M12 plug straight - M12 plug straight, shielded, 8-pole, PVC-C

P/N
142MNA11020
EAN 4251394647692
2026/09/09
Version: J

Technical Data

Electrical characteristics	
Current carrying capacity	2 A at 40 °C
Rated voltage	30 V
Insulation resistance	min. 100 MOhm
Mechanical data	
Life - Number of mating cycles	min. 100
Maximum operating bending radius	67 mm
Alternating bending radius	67 mm

Materials and material properties	
Cable	
Material - Conductor	Cu (copper)
Material - Conductor Insulation	PVC
Material - Cable jacket	PVC
Interface 1	
Material - Body interface 1	Plastics
Material - Contact interface 1	CuSn
Material - Contact finish interface 1	Au (gold)
Material - Contact carriers interface 1	Plastics
Material - Union nut interface 1	CuZnPb (brass)
Material - Union nut finish interface 1	Ni (nickel)
Interface 2	
Material - Body interface 2	Plastics
Material - Contact interface 2	CuSn
Material - Contact finish interface 2	Au (gold)
Material - Contact carriers interface 2	Plastics
Material - Union nut interface 2	CuZnPb (brass)
Material - Union nut finish interface 2	Ni (nickel)
UV-resistance	yes
RoHS	compliant

© 2026 METZ CONNECT - Technische Änderungen vorbehalten! Subject to modifications! Sous réserve de modifications techniques!

M12 Sensor/actuator cable, A-coded, 2.0 m, M12 plug straight - M12 plug straight, shielded, 8-pole, PVC-C

P/N
142MNA11020
EAN 4251394647692
2026/09/09
Version: J

Technical Data

Environmental conditions	
Temperature (min. - max.)	
Temperature - Operating °C	-25 °C - 80 °C
Temperature - Operating °F	-13 °F - 176 °F
Temperature - Installation °C	0 °C - 80 °C
Temperature - Installation °F	32 °F - 176 °F
Particulate ingress interface 1	IP6X when plugged in
Liquid ingress/immersion interface 1	IPX5, IPX7, IPX8 when plugged in
Particulate ingress interface 2	IP6X when plugged in
Liquid ingress/immersion interface 2	IPX5, IPX7, IPX8 when plugged in
Pollution degree interface 1	3
Pollution degree interface 2	3
Approvals	
UL listed (file no.)	Approval pending
Standards/Regulations	
Connectors for electronic equipment	
circular connector	DIN EN 61076-2-101
Classifications	
ETIM 7.0	EC001855
ETIM 8.0	EC001855
ETIM 9.0	EC001855
ETIM 10.0	EC001855

Packing details	
Type of packaging	1 pc(s) / plastic bag

Application note

This product is a standard product of METZ CONNECT. METZ CONNECT is not aware of the specific intended use of the goods by the Customer or any customers of the Customer. The Customer guarantees that it has fully and sufficiently tested the use of the goods and any product modifications, product changes or product enhancements with regard to the specific intended use in accordance with the state of the art or in any other way.

© 2026 METZ CONNECT - Technische Änderungen vorbehalten! Subject to modifications! Sous réserve de modifications techniques!

Data sheet

M12 Sensor/actuator cable, A-coded, 2.0 m, M12 plug straight - M12 plug straight, shielded, 8-pole, PVC-C

P/N
142MNA11020
EAN 4251394647692
2026/09/09
Version: J

Illustrations

Dimensional drawing

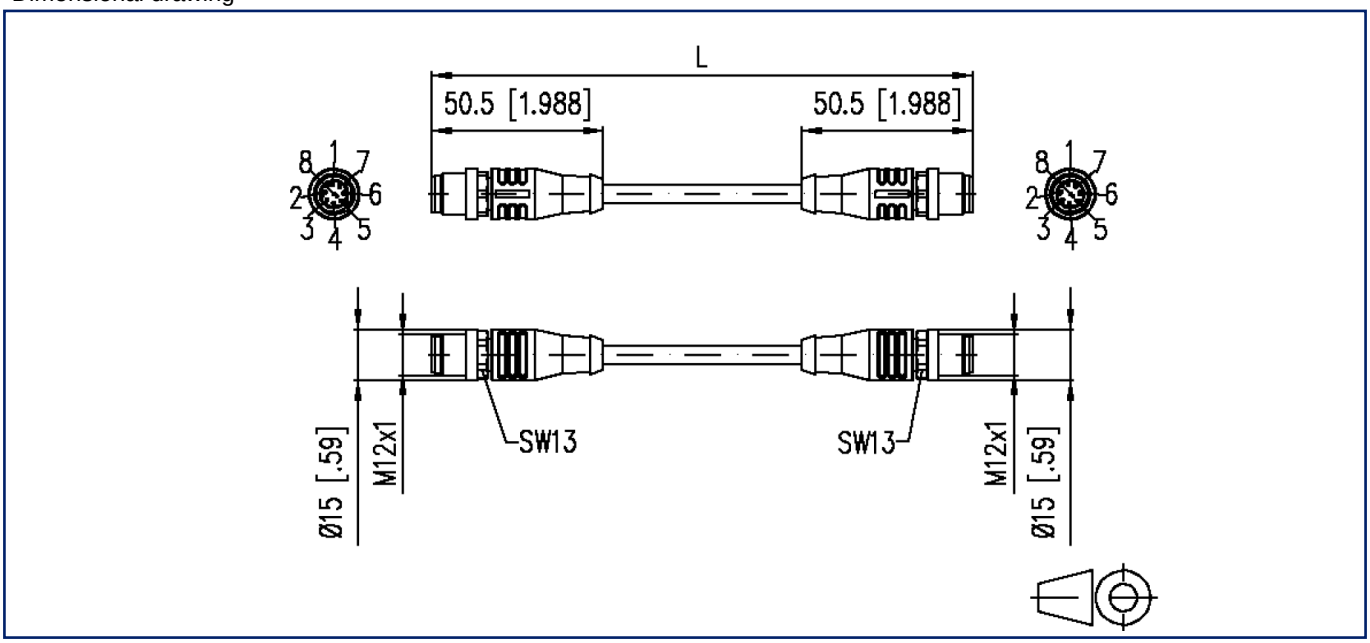

Wiring diagram

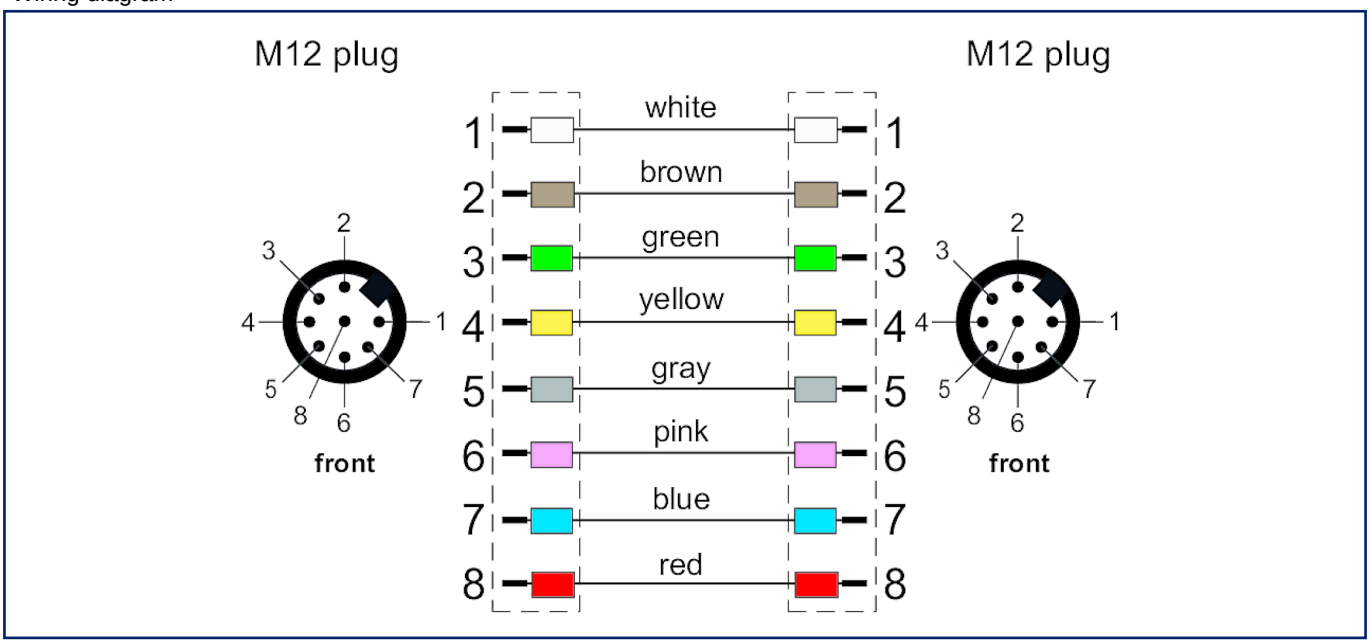

© 2026 METZ CONNECT - Technische Änderungen vorbehalten! Subject to modifications! Sous réserve de modifications techniques!

M12 Sensor/actuator cable, A-coded, 2.0 m, M12 plug straight - M12 plug straight, shielded, 8-pole, PVC-C

P/N
142MNA11020
EAN 4251394647692
2026/09/09
Version: J

Illustrations

Principle diagram

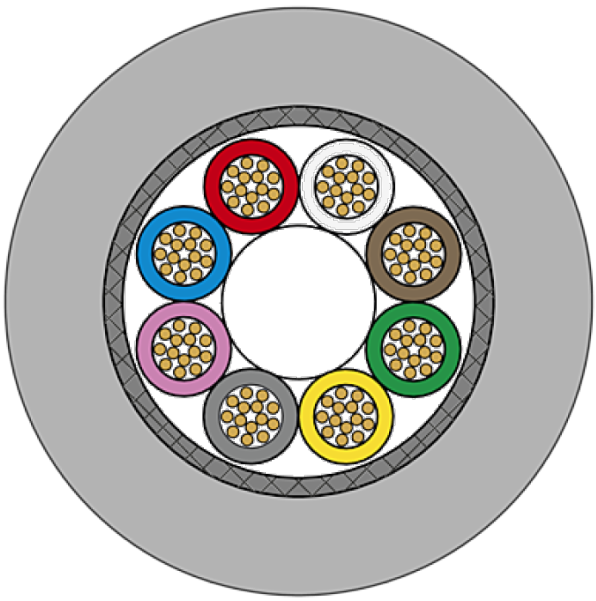

© 2026 METZ CONNECT - Technische Änderungen vorbehalten! Subject to modifications! Sous réserve de modifications techniques!