date: 11/10/2026

DL ROUND MIDI

Part number 3114249

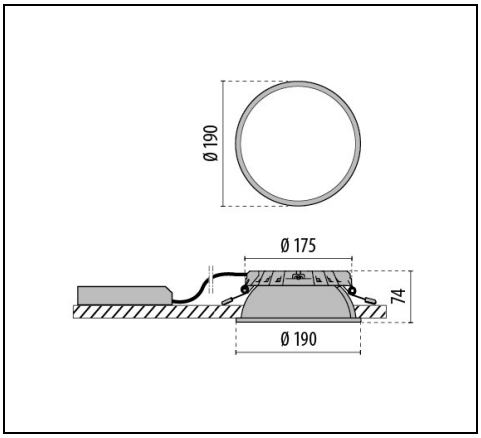

IP 20 | IP 20 IP 44 | CLASS I | 1h/3h | CE | EAC | UKCA

Description

Recessed, modular, round LED downlight for indoor, comprising:
- LED module, die-cast aluminium heat sink, reflector with integrated ceiling trim, diffuser and external supply unit
- All components can be tool-less replaced lately
- High-shine modular reflector with integrated ceiling trim made of metallised injection-moulded ABS with light-tight connection to LED module
- Integrated diffuser grants an optimised uniformity
- Die-cast aluminium heat sink with Fast™ (Flexible air stream technology) cooling system grants an excellent dissipation and thermal management
- Built-in driver
- DALI dimmable
- Suitable for ceiling tile thickness from 1-25 mm
- Quick and toolless installation

Options:
- Wieland connector GST18i3
- Emergency 1h
- Emergency 3h
- High-shine modular radial louvre reflector with integrated ceiling frame made of metallised injection-moulded ABS with light-tight connection to LED module
- Injection-moulded ABS reflector with integral ceiling trim with light-tight connection to LED module and matte plastic pane (IP54)
- Injection-moulded ABS reflector with integral ceiling trim with light-tight connection to LED module

To maintain the regular updating of our products, PERFORMANCE iN LIGHTING reserves the right to make changes without prior notice. For the most up to date information we always recommend you read the latest version published on the website www.performanceinlighting.com. Delivered luminaire lumen outputs and power consumptions, including losses, are subject to a tolerance of +/- 7%, and unless otherwise stated the values apply to an ambient temperature of 25ºC. Terms of warranty are available at https://www.performanceinlighting.com/qr/company/led-warranty

For information:
PERFORMANCE iN LIGHTING S.p.A. Headquarters - Italy
Viale del Lavoro 9/11
37030 Colognola ai Colli Verona - Italy
Tel. +39 045 61 59 211

info.it@pil.lighting
www.performanceinlighting.com

Product data

ETIM Group:	EG000027	**ETIM Class:**	EC001744

General information

Lampholder:	LED	**Light source:**	LED
Lightsource lumen output [lm]:	2100	**Luminaire lumen output [lm]:**	1780
Luminaire wattage [W]:	13 W	**Luminous efficacy [lm/W]:**	137
CRI:	80	**Colour temperature [K]:**	4000
Colour / Finishing:	WH-87 / White / Textured	**IP degree of protection:**	IP20
IP above/below ceiling:	IP20/IP44	**Impact resistance / impact energy:**	IK07 2J xx5
Protection class:	I	**Optic:**	C/EW - Circular Extra-Wide
Beam angle:	2 x 41°	**Net weight [kg]:**	1.76
Overall diameter [mm]:	190	**Overall height [mm]:**	74
Cut-out diameter [mm]:	Ø 175	**Minimum installation depth [mm]:**	80

Mechanical features

Shape:	Round 150 ≤ x ≤ 300 mm	**Housing material:**	Aluminium
Diffuser material:	Opal plastic	**Glow wire test [°C]:**	650 °C

Electrical features

Voltage type:	AC/DC	**Input voltage [V AC]:**	220/240
Input frequency [Hz]:	0/50/60	**Power factor / COS Φ:**	>0.9
Input voltage [V DC]:	176/280	**Inrush current [A/µs]:**	15 / 204
C10 1.5 mm²:	41	**C16 2.5 mm²:**	66
B10 1.5 mm²:	25	**B16 2.5 mm²:**	40

Installation

Application area:	Indoor lighting	**Mounting type:**	Downlight and spotlight
Min. ambient temperature [°C]:	10	**Max. ambient temperature [°C]:**	40

Light features

MacAdam:	3	**Lumen maintenance:**	L80B10@60000h
Distribution of light emission:	Direct	**UGR max.:**	22.0

To maintain the regular updating of our products, PERFORMANCE iN LIGHTING reserves the right to make changes without prior notice. For the most up to date information we always recommend you read the latest version published on the website www.performanceinlighting.com. Delivered luminaire lumen outputs and power consumptions, including losses, are subject to a tolerance of +/- 7%, and unless otherwise stated the values apply to an ambient temperature of 25ºC. Terms of warranty are available at https://www.performanceinlighting.com/qr/company/led-warranty

For information:
PERFORMANCE iN LIGHTING S.p.A. Headquarters - Italy
Viale del Lavoro 9/11
37030 Colognola ai Colli Verona - Italy
Tel. +39 045 61 59 211

info.it@pil.lighting
www.performanceinlighting.com

Photometric data

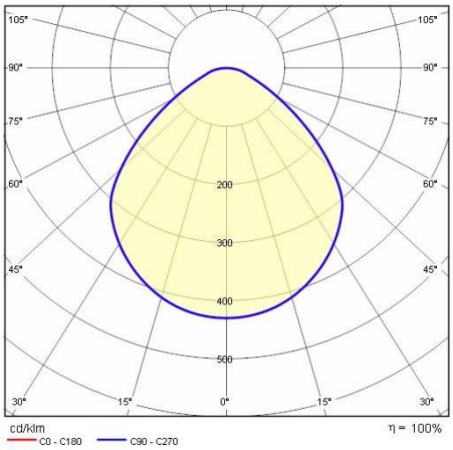

Optional accessories

DL ROUND MIDI

3109007

Black reflector DL ROUND MIDI

3109009

Matte plastic panel (IP54) DL ROUND MIDI

To maintain the regular updating of our products, PERFORMANCE iN LIGHTING reserves the right to make changes without prior notice. For the most up to date information we always recommend you read the latest version published on the website www.performanceinlighting.com. Delivered luminaire lumen outputs and power consumptions, including losses, are subject to a tolerance of +/- 7%, and unless otherwise stated the values apply to an ambient temperature of 25ºC. Terms of warranty are available at https://www.performanceinlighting.com/qr/company/led-warranty

For information:
PERFORMANCE iN LIGHTING S.p.A. Headquarters - Italy
Viale del Lavoro 9/11
37030 Colognola ai Colli Verona - Italy
Tel. +39 045 61 59 211

info.it@pil.lighting
www.performanceinlighting.com