Data sheet

CPW-E12, 230 V AC, 0.2 - 2.5 A

P/N
110281052013
EAN 4250184121046
2026/09/23
Version: I

Illustrations

Dimensional drawing

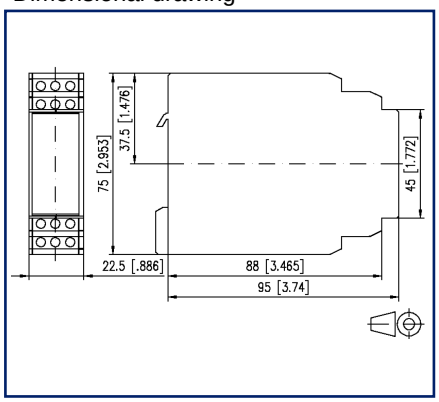

Wiring diagram

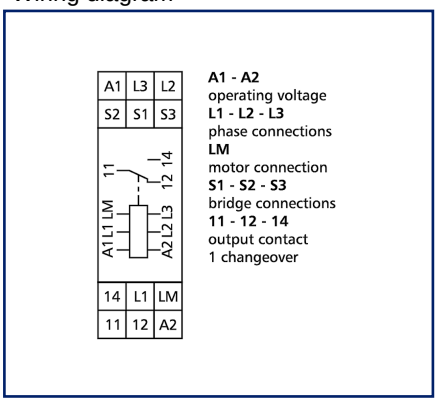

See enlarged drawings at the end of document

Product specification

The cosPhi monitor is used for detecting underload. The response value and the response time can be adjusted. It can also be used in combination with a frequency converter (frequency: 2 to 200 Hz). Monitoring is accomplished by recognizing the phase shift between current and voltage. This phase angle varies depending on the motor load. The functions can be adjusted by means of bridges S1 - S2 - S3: S1 - S2 open = relay deactivated with underload, S1 - S2 bridged = relay activated with underload, S1 - S3 open = with fault memory, S1 - S3 bridged = without fault memory. The module can be unblocked remotely by means of a closing contact on S1 - S3. If there is a fault memory (no bridge over S1-S3), the fault message is active until it is acknowledged or the supply voltage is interrupted.

© 2026 METZ CONNECT - Technische Änderungen vorbehalten! Subject to modifications! Sous réserve de modifications techniques!

P/N
110281052013
EAN 4250184121046
2026/09/23
Version: I

Technical Data

Supply	
Operating voltage	230 V AC -10% ... +10%
Frequency range	2 ... 200 Hz
Duty cycle relative	100 %
Inputs	
Input voltage (1 ... 10)	230 V AC 400 V AC
Input current (1 ... 10)	min. 0.2 A max. 2.5 A
Response value cosPhi	0 - 0,97, adjustable
Response time	1 s - 100 s, adjustable
Outputs	
Contacts	1 changeover contact
Contact material	AgNi
Switching voltage (max.)	250 V AC
Continuous Current	4 A
Switch-off delay	1000 VA
Switching frequency	1200 switching cycles/h
Indicator	green and red LED
Housing	
Dimensions	
Dimension (W x H x D)	22.5 mm x 75 mm x 95 mm
Dimension (W x H x D)	0.886 in. x 2.953 in. x 3.74 in.
Weight	170 g
Mounting style	Standard rail TH35
Mounting position	any
Apposition	without distance
Connection type	Screw type terminal blocks
Terminal blocks	
Wire cross section solid	0.2 mm² - 2.5 mm² / AWG 22-12
Wire cross section multi	0.25 mm² - 2.5 mm² / AWG 22-12
Wire cross section with wire ferrule	0.25 mm² - 2.5 mm² / AWG 22-12
Screw torque (max.)	0.5 Nm
Stripping length (min.)	8 mm

© 2026 METZ CONNECT - Technische Änderungen vorbehalten! Subject to modifications! Sous réserve de modifications techniques!

P/N
110281052013
EAN 4250184121046
2026/09/23
Version: I

Technical Data

Material	
Material - Housing	Polyamid 6.6 V0
Color	gray
Material - Terminal block	Polyamid 6.6 V0
Material - Covers	Polyamid 6.6 V0
Protection category according to IEC 60529	
Protection category - housing (acc. to IEC 60529)	IP40
Protection category - terminal blocks (acc. to IEC 60529)	IP20
Climatic Data	
Operating	
Temperature - Operating °C	0 °C - 55 °C
Temperature - Operating °F	32 °F - 131 °F
Relative humidity	max. 85 % non-condensing
Storage	
Temperature - Storage °C	-20 °C - 70 °C
Temperature - Storage °F	-4 °F - 158 °F
Classifications	
ETIM 7.0	EC001441
ETIM 8.0	EC001441
ETIM 9.0	EC001441
ETIM 10.0	EC001441

Application note

This product is a standard product of METZ CONNECT. METZ CONNECT is not aware of the specific intended use of the goods by the Customer or any customers of the Customer. The Customer guarantees that it has fully and sufficiently tested the use of the goods and any product modifications, product changes or product enhancements with regard to the specific intended use in accordance with the state of the art or in any other way.

© 2026 METZ CONNECT - Technische Änderungen vorbehalten! Subject to modifications! Sous réserve de modifications techniques!

P/N
110281052013
EAN 4250184121046
2026/09/23
Version: I

Illustrations

Dimensional drawing

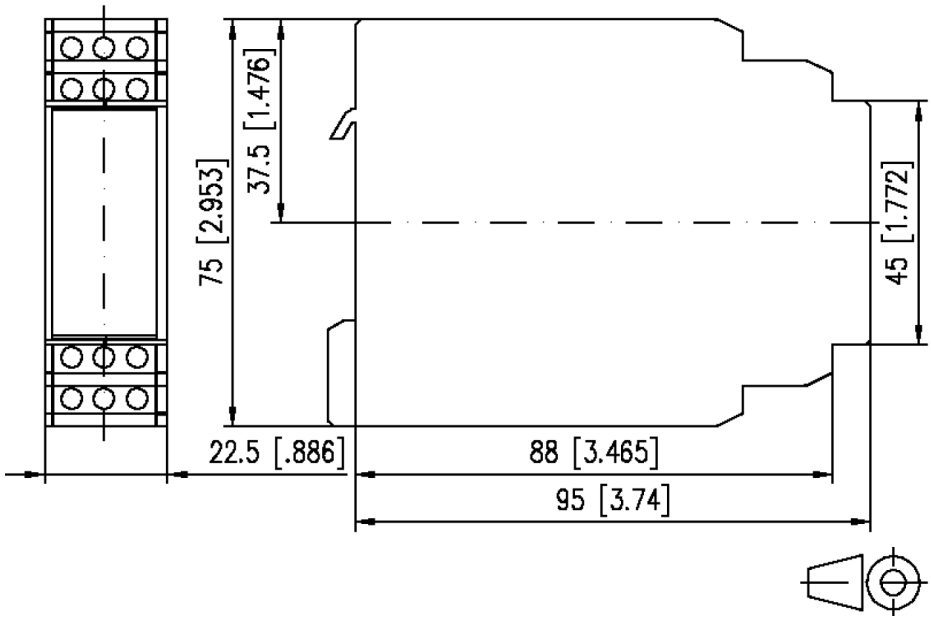

Wiring diagram

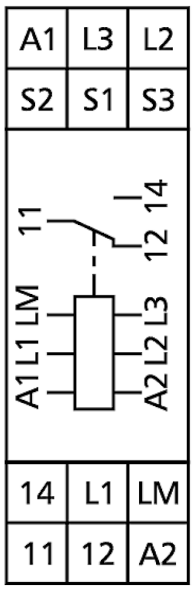

A1 - A2
operating voltage
L1 - L2 - L3
phase connections
LM
motor connection
S1 - S2 - S3
bridge connections
11 - 12 - 14
output contact
1 changeover

© 2026 METZ CONNECT - Technische Änderungen vorbehalten! Subject to modifications! Sous réserve de modifications techniques!

P/N
110281052013
EAN 4250184121046
2026/09/23
Version: I

Illustrations

Function diagram

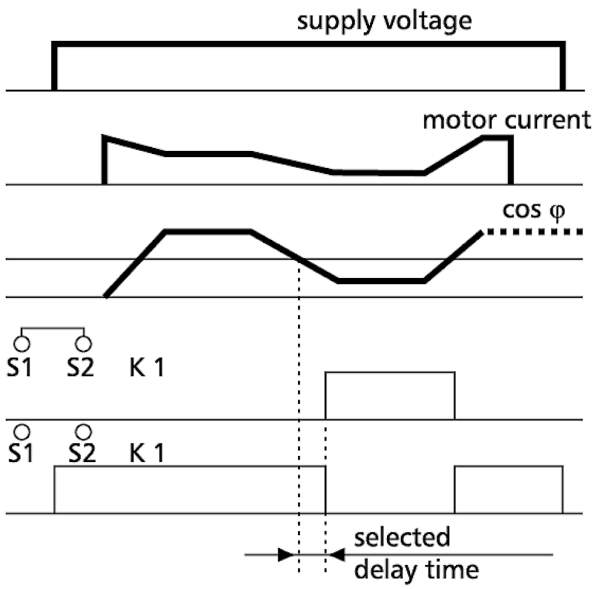

© 2026 METZ CONNECT - Technische Änderungen vorbehalten! Subject to modifications! Sous réserve de modifications techniques!