Data sheet

M12 Sensor/actuator cable, A-coded, 10.0 m, M12 jack straight - free line end, shielded, 8-pole, PUR-C

P/N
142MHA20100
EAN 4251394647067
2026/09/08
Version: I

Illustrations

Dimensional drawing

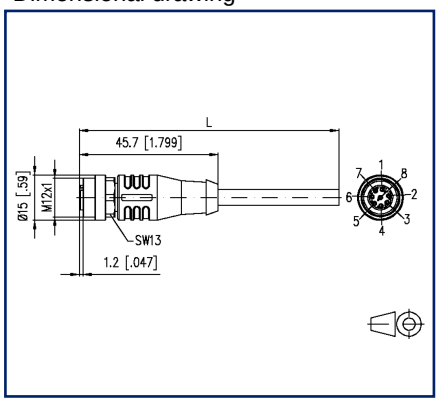

Wiring diagram

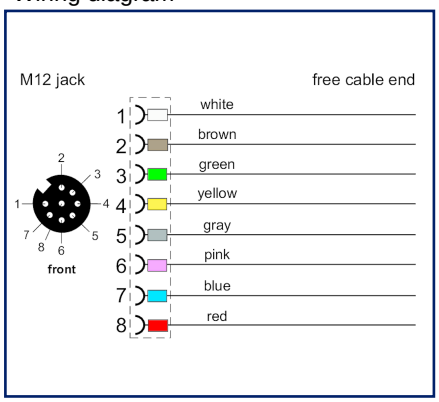

See enlarged drawings at the end of document

Product specification

Flexible, silicone- and halogen-free control cable with high mechanical strength. The cable is resistant to chemicals, hydrolysis and microbes. The drag-chain application is possible at a bending radius of minimum 10xd. Due to its weld-field immunity, the cable is very well suited for the flexible application in robotics, machine tools and metal-cutting production. The cables meet the UL and CSA (UL10493/20549; cULus) requirements. Special features: flame retardant, seawater resistant, recyclable, LABS free, RoHs compliant, acid and alkali resistant, ozone resistant, UV resistant, hydrolysis proof, drag chain resistant, torsion resistant, welding sparks resistant, halogen free, silicone free, oil resistant

- Standard variants: 1.0 m, 2.0 m, 5.0 m, 10.0 m.
- Other cable lengths on request.

© 2026 METZ CONNECT - Technische Änderungen vorbehalten! Subject to modifications! Sous réserve de modifications techniques!

M12 Sensor/actuator cable, A-coded, 10.0 m, M12 jack straight - free line end, shielded, 8-pole, PUR-C

P/N
142MHA20100
EAN 4251394647067
2026/09/08
Version: I

Technical Data

General Data	
Fields of application	Industrial Ethernet
Design	Sensor/actuator connection cable M12, A-coded
Shielding	shielded
Transmission technology	Copper
Color coding fiber/ wire(s)	white, brown, green, yellow, gray, pink, blue, red
Color	black
Dimensions	
Dimension - Interface 1 (L x W x H)	45.7 mm x 15 mm x 15 mm
Dimension - Interface 1 (L x W x H)	1.799 in. x 0.591 in. x 0.591 in.
Cable length (m)	10 m
Cable length (ft)	32.81 ft
Labeling option	identification label carrier

Connections/interfaces	
Connector technology interface 1	M12-jack
Connector technology interface 2	free line end
Coding interface 1	A-coded
Number of positions/contacts interface 1	8
Termination data, stranded wire (min. - max.)	
Conductor cross section, stranded wire	AWG 24/32
Conductor cross section, stranded wire	0.25 mm²
Stranded wire structure	32x0.10mm
Cable sheath diameter (min. - max.)	
Cable sheath diameter	6.3 mm
Cable sheath diameter	0.248 in.

Electrical characteristics	
Current carrying capacity	2 A at 40 °C
Rated voltage	30 V
Insulation resistance	min. 100 MOhm

© 2026 METZ CONNECT - Technische Änderungen vorbehalten! Subject to modifications! Sous réserve de modifications techniques!

M12 Sensor/actuator cable, A-coded, 10.0 m, M12 jack straight - free line end, shielded, 8-pole, PUR-C

P/N
142MHA20100
EAN 4251394647067
2026/09/08
Version: I

Technical Data

Mechanical data	
Life - Number of mating cycles	min. 100
Torsion	+/-180°/m, >= 0.5 million cycles
Maximum operating bending radius	75.6 mm
Alternating bending radius	75 mm
acceleration	5 m/s²

Materials and material properties	
Cable	
Material - Conductor	Cu (copper)
Material - Conductor Insulation	polypropylene
Material - Cable jacket	PUR
Flame retardancy	yes
Interface 1	
Material - Body interface 1	Plastics
Material - Protective housing interface 1	FPM/FKM
Material - Contact interface 1	CuSn
Material - Contact finish interface 1	Au (gold)
Material - Contact carriers interface 1	Plastics
Material - Union nut interface 1	CuZnPb (brass)
Material - Union nut finish interface 1	Ni (nickel)
Oil resistance	yes
UV-resistance	yes
drag chain suitable	yes
torsional	yes
RoHS	compliant

Environmental conditions	
Temperature (min. - max.)	
Temperature - Operating °C	-40 °C - 90 °C
Temperature - Operating °F	-40 °F - 194 °F
Temperature - Installation °C	-30 °C - 90 °C
Temperature - Installation °F	-22 °F - 194 °F
Temperature - drag chain °C	-25 °C - 60 °C

© 2026 METZ CONNECT - Technische Änderungen vorbehalten! Subject to modifications! Sous réserve de modifications techniques!

M12 Sensor/actuator cable, A-coded, 10.0 m, M12 jack straight - free line end, shielded, 8-pole, PUR-C

P/N
142MHA20100
EAN 4251394647067
2026/09/08
Version: I

Technical Data

Environmental conditions	
Temperature (min. - max.)	
Temperature - drag chain °F	-13 °F - 140 °F
Particulate ingress interface 1	IP6X when plugged in
Liquid ingress/immersion interface 1	IPX5, IPX7, IPX8 when plugged in
Pollution degree interface 1	3
Approvals	
UL listed (file no.)	Approval pending
Standards/Regulations	
Connectors for electronic equipment	
circular connector	DIN EN 61076-2-101
Classifications	
ETIM 7.0	EC001855
ETIM 8.0	EC001855
ETIM 9.0	EC001855
ETIM 10.0	EC001855

Packing details	
Type of packaging	1 pc(s) / plastic bag

Application note

This product is a standard product of METZ CONNECT. METZ CONNECT is not aware of the specific intended use of the goods by the Customer or any customers of the Customer. The Customer guarantees that it has fully and sufficiently tested the use of the goods and any product modifications, product changes or product enhancements with regard to the specific intended use in accordance with the state of the art or in any other way.

© 2026 METZ CONNECT - Technische Änderungen vorbehalten! Subject to modifications! Sous réserve de modifications techniques!

Data sheet

M12 Sensor/actuator cable, A-coded, 10.0 m, M12 jack straight - free line end, shielded, 8-pole, PUR-C

P/N
142MHA20100
EAN 4251394647067
2026/09/08
Version: I

Illustrations

Dimensional drawing

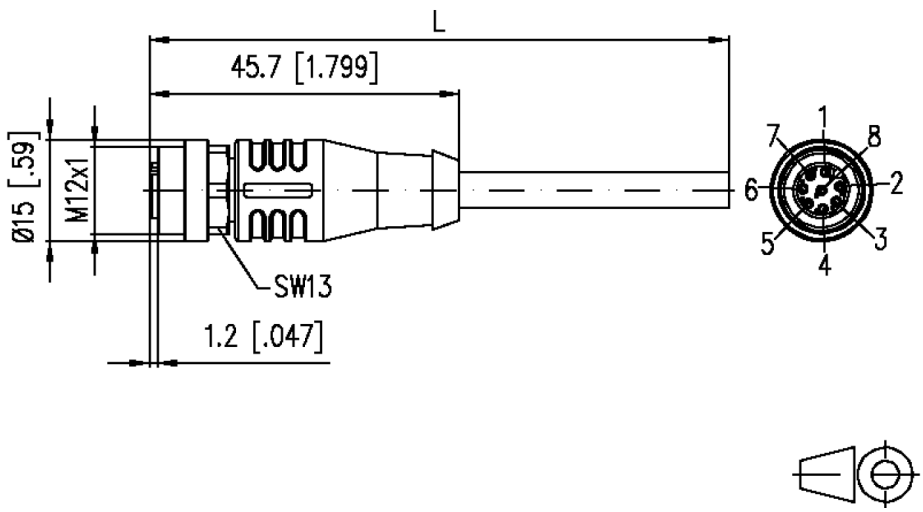

Wiring diagram

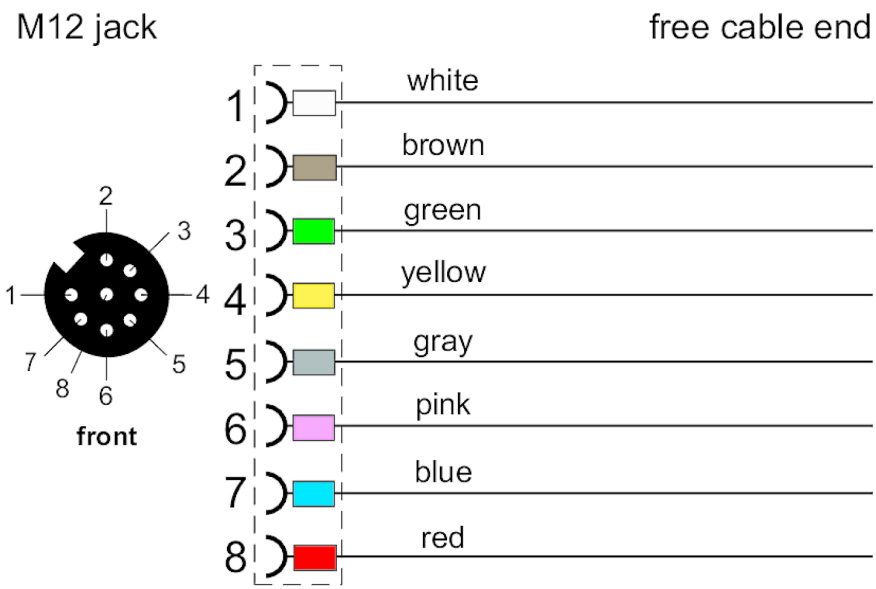

© 2026 METZ CONNECT - Technische Änderungen vorbehalten! Subject to modifications! Sous réserve de modifications techniques!

M12 Sensor/actuator cable, A-coded, 10.0 m, M12 jack straight - free line end, shielded, 8-pole, PUR-C

P/N
142MHA20100
EAN 4251394647067
2026/09/08
Version: I

Illustrations

Principle diagram

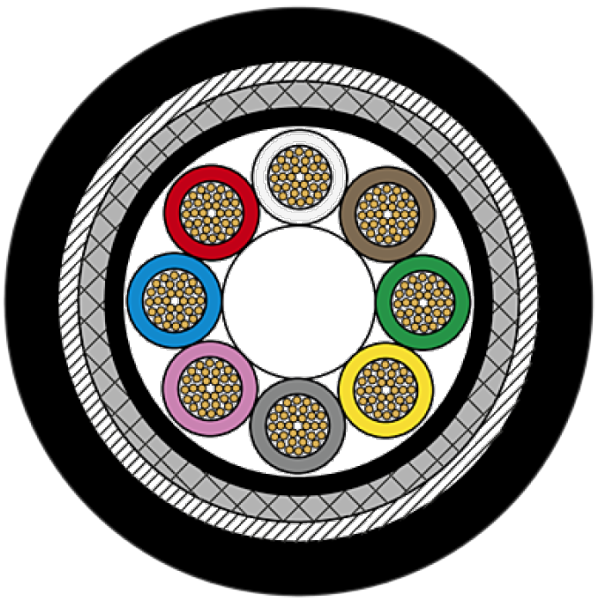

© 2026 METZ CONNECT - Technische Änderungen vorbehalten! Subject to modifications! Sous réserve de modifications techniques!