# Data sheet

## CPW-E12, 230 V AC, 1 - 10 A

**P/N**
**1102810520**
**EAN 4250184121039**
2026/09/23
Version: I

## Illustrations

Dimensional drawing

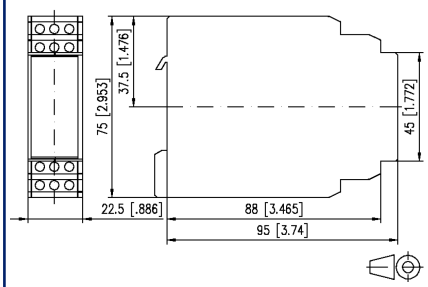


Wiring diagram

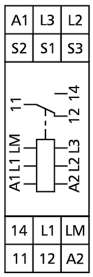


**A1 - A2**
operating voltage
**L1 - L2 - L3**
phase connections
**LM**
motor connection
**S1 - S2 - S3**
bridge connections
**11 - 12 - 14**
output contact
1 changeover

See enlarged drawings at the end of document

## Product specification

The cosPhi monitor is used for detecting underload. The response value and the response time can be adjusted. It can also be used in combination with a frequency converter (frequency: 2 to 200 Hz). Monitoring is accomplished by recognizing the phase shift between current and voltage. This phase angle varies depending on the motor load. The functions can be adjusted by means of bridges S1 - S2 - S3: S1 - S2 open = relay deactivated with underload, S1 - S2 bridged = relay activated with underload, S1 - S3 open = with fault memory, S1 - S3 bridged = without fault memory. The module can be unblocked remotely by means of a closing contact on S1 - S3. If there is a fault memory (no bridge over S1-S3), the fault message is active until it is acknowledged or the supply voltage is interrupted.

© 2026 METZ CONNECT - Technische Änderungen vorbehalten! Subject to modifications! Sous réserve de modifications techniques!

P/N
1102810520
EAN 4250184121039
2026/09/23
Version: I

## Technical Data

| | |
|---|---|
| **Supply** | |
| Operating voltage | 230 V AC -10% ... +10% |
| Frequency range | 2 ... 200 Hz |
| Duty cycle relative | 100 % |
| **Inputs** | |
| Input voltage (1 ... 10) | 230 V AC<br>400 V AC |
| Input current (1 ... 10) | min. 1 A<br>max. 10 A |
| Response value cosPhi | 0 - 0,97, adjustable |
| Response time | 1 s - 100 s, adjustable |
| **Outputs** | |
| Contacts | 1 changeover contact |
| Contact material | AgNi |
| Switching voltage (max.) | 250 V AC |
| Continuous Current | 4 A |
| Switch-off delay | 1000 VA |
| Switching frequency | 1200 switching cycles/h |
| Indicator | green and red LED |
| **Housing** | |
| Dimensions | |
| Dimension (W x H x D) | 22.5 mm x 75 mm x 95 mm |
| Dimension (W x H x D) | 0.886 in. x 2.953 in. x 3.74 in. |
| Weight | 170 g |
| Mounting style | Standard rail TH35 |
| Mounting position | any |
| Apposition | without distance |
| Connection type | Screw type terminal blocks |
| **Terminal blocks** | |
| Wire cross section solid | 0.2 mm² - 2.5 mm² / AWG 22-12 |
| Wire cross section multi | 0.25 mm² - 2.5 mm² / AWG 22-12 |
| Wire cross section with wire ferrule | 0.25 mm² - 2.5 mm² / AWG 22-12 |
| Screw torque (max.) | 0.5 Nm |
| Stripping length (min.) | 8 mm |

© 2026 METZ CONNECT - Technische Änderungen vorbehalten! Subject to modifications! Sous réserve de modifications techniques!

P/N
1102810520
EAN 4250184121039
2026/09/23
Version: I

## Technical Data

| | |
|---|---|
| **Material** | |
| Material - Housing | Polyamid 6.6 V0 |
| Color | gray |
| Material - Terminal block | Polyamid 6.6 V0 |
| Material - Covers | Polyamid 6.6 V0 |
| **Protection category according to IEC 60529** | |
| Protection category - housing (acc. to IEC 60529) | IP40 |
| Protection category - terminal blocks (acc. to IEC 60529) | IP20 |
| **Climatic Data** | |
| Operating | |
| Temperature - Operating °C | 0 °C - 55 °C |
| Temperature - Operating °F | 32 °F - 131 °F |
| Relative humidity | max. 85 % non-condensing |
| Storage | |
| Temperature - Storage °C | -20 °C - 70 °C |
| Temperature - Storage °F | -4 °F - 158 °F |
| **Classifications** | |
| ETIM 7.0 | EC001441 |
| ETIM 8.0 | EC001441 |
| ETIM 9.0 | EC001441 |
| ETIM 10.0 | EC001441 |

### Application note

This product is a standard product of METZ CONNECT. METZ CONNECT is not aware of the specific intended use of the goods by the Customer or any customers of the Customer. The Customer guarantees that it has fully and sufficiently tested the use of the goods and any product modifications, product changes or product enhancements with regard to the specific intended use in accordance with the state of the art or in any other way.

© 2026 METZ CONNECT - Technische Änderungen vorbehalten! Subject to modifications! Sous réserve de modifications techniques!

## Accessories

| P/N | Designation |
|---|---|
| 1101810507 | Current Converter TAmini 50/5 A |
| 1101810508 | Current Converter TAmini 100/5 A |

© 2026 METZ CONNECT - Technische Änderungen vorbehalten! Subject to modifications! Sous réserve de modifications techniques!

P/N
1102810520
EAN 4250184121039
2026/09/23
Version: I

## Illustrations

Dimensional drawing

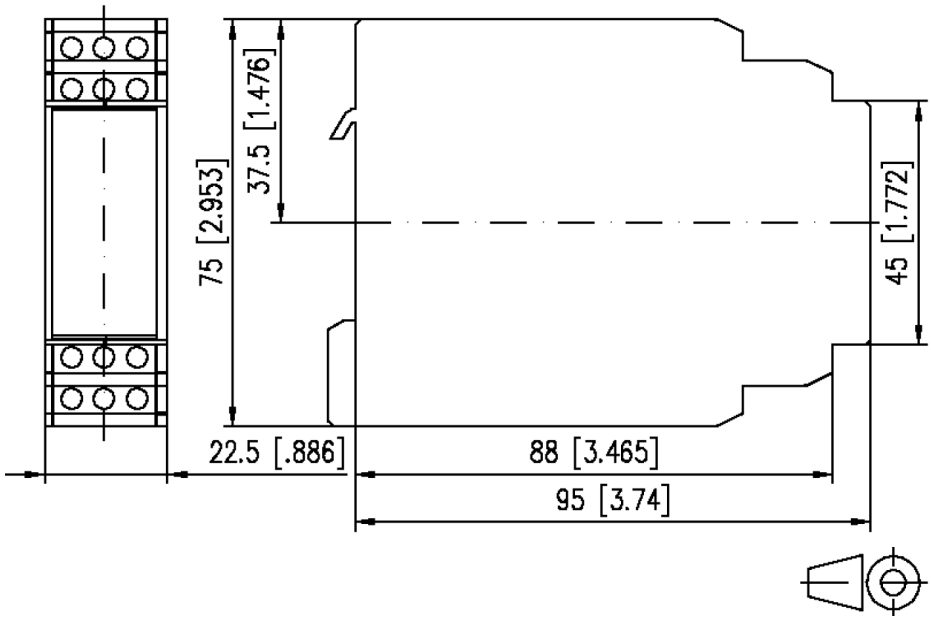


Wiring diagram

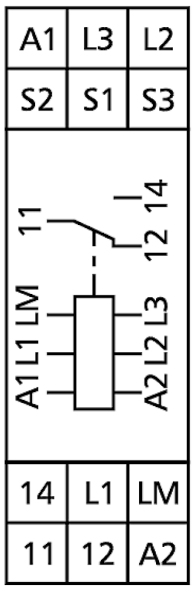


**A1 - A2**
operating voltage
**L1 - L2 - L3**
phase connections
**LM**
motor connection
**S1 - S2 - S3**
bridge connections
**11 - 12 - 14**
output contact
1 changeover

© 2026 METZ CONNECT - Technische Änderungen vorbehalten! Subject to modifications! Sous réserve de modifications techniques!

P/N
1102810520
EAN 4250184121039
2026/09/23
Version: I

## Illustrations

Function diagram

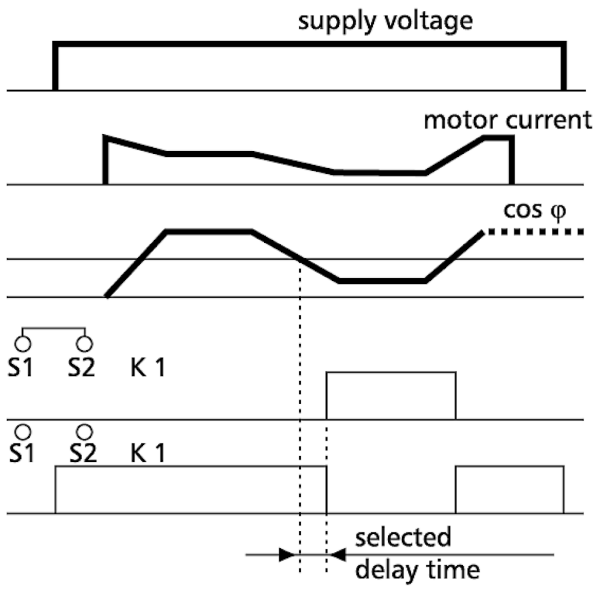


© 2026 METZ CONNECT - Technische Änderungen vorbehalten! Subject to modifications! Sous réserve de modifications techniques!