ATyS range

ATyS r, ATyS g, ATyS p
from 125 to 3200 A

Accessories

Terminal shrouds

Use
IP2X protection against direct contact with terminals or connecting parts.

Advantages
Perforations allow remote thermographic inspection without the need to remove the shrouds.

acces_206.psd

Rating (A)	Frame size	No. of poles	Position	Reference
125 … 200	B3	3 P	top / bottom / front (I) / rear (II)	2694 **3014**(1)(2)
125 … 200	B3	4 P	top / bottom / front (I) / rear (II)	2694 **4014**(1)(2)
250 … 400	B4	3 P	top / bottom / front (I) / rear (II)	2694 **3021**(1)(2)
250 … 400	B4	4 P	top / bottom / front (I) / rear (II)	2694 **4021**(1)(2)
500 … 630	B5	3 P	top / bottom / front (I) / rear (II)	2694 **3051**(1)(2)
500 … 630	B5	4 P	top / bottom / front (I) / rear (II)	2694 **4051**(1)(2)

(1) For complete shrouding at front, rear, top and bottom, order quantity 4; if equipped with bridging bars order quantity 3.
(2) For top and bottom shrouding for the front only, order quantity 2.

Terminal screens

Use
Upstream and downstream protection against direct contact with terminals or connection parts.
For upstream and downstream protection, order quantity 1.

acces_207.eps

Rating (A)	Frame size	No. of poles	Position	Reference
125 … 200	B3	3 P	top/bottom	1509 **3012**
125 … 200	B3	4 P	top/bottom	1509 **4012**
250 … 400	B4	3 P	top/bottom	1509 **3025**
250 … 400	B4	4 P	top/bottom	1509 **4025**
500 … 630	B5	3 P	top/bottom	1509 **3063**
500 … 630	B5	4 P	top/bottom	1509 **4063**
800 … 1250	B6	3 P	top/bottom	1509 **3080**
800 … 1250	B6	4 P	top/bottom	1509 **4080**
1600	B7	3 P	top/bottom	1509 **3160**
1600	B7	4 P	top/bottom	1509 **4160**
2000 … 3200	B8	3 P	top/bottom	1509 **3200**
2000 … 3200	B8	4 P	top/bottom	1509 **4200**

Inter-phase barriers

Use
Safety isolation between the terminals, essential for use at 690 VAC or in a polluted or dusty atmosphere.

Rating (A)	Frame size	No. of poles	Reference
125 … 200	B3	3 P	2998 **0033**
125 … 200	B3	4 P	2998 **0034**
250 … 400	B4	3 P	2998 **0023**
250 … 400	B4	4 P	2998 **0024**
500 … 630	B5	3 P	2998 **0013**
500 … 630	B5	4 P	2998 **0014**
800 … 3200	B6 … B8	3/4 P	included

Accessories (continued)

Bridging bars

Use
For bridging power terminals on the incoming or outgoing side of the switch.

Rating (A)	Frame size	Section (mm)	Reference[1]
125 … 200	B3	20 x 2.5	4109 **0019**
250	B4	25 x 2.5	4109 **0025**
315 … 400	B4	32 x 5	4109 **0039**
500	B5	32 x 5	4109 **0050**
630	B5	50 x 5	4109 **0063**
800 … 1000	B6	50 x 6	4109 **0080**
1250	B6	60 x 8	4109 **0120**
1600	B7	90 x 10	4109 **0160**

(1) 3-pole device, order 3 bridging bars; for 4-pole devices, order 4.

acces_205.eps

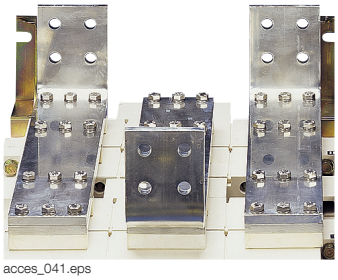
acces_041.eps

Copper bar connection pieces

Use
For ratings 2000 to 3200 A.
Enable:
- Flat connection: the connection pieces provide a link between the two power terminals of the same pole (Fig. 1).
- Edgewise connection: the connection pieces provide a link between the two power terminals of the same pole and an edgewise bar connection terminal.
- Top or bottom bridging between two poles (Fig. 3).

Once installed, the power terminal is connection ready.

For 3200 A rating, connection pieces (part A) are supplied as standard. Bolt sets must be ordered separately.

Connection: the quantities given in the table below refer to the number of pieces required per pole, top or bottom.
Bridging connection: the quantities given in the table below refer to the number of pieces required to complete a single bridging connection between two poles.

Fig. 1

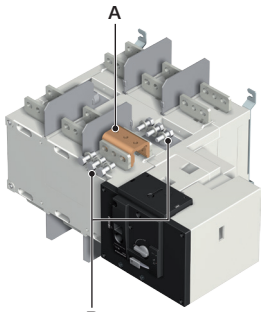

acces_459_a_1_x_cat.ai

(1) Single pole connection: 1 pole (top or bottom) comprises two power terminals which are to be linked with the copper connection kit.

	Reference	2000 - 2500 A			3200 A		
		Fig. 1	Fig. 2	Fig. 3	Fig. 1	Fig. 2	Fig. 3
		Connection		Bridging connection I - II	Connection		Bridging connection I - II
		Flat	Edgewise		Flat	Edgewise	
Connection - part A	2619 **1200**	1	1	2[2]	included	included	included
Bolt kit 35 mm - part B	2699 **1201**	1[1]		2[2]	1[1]		2[2]
Bolt kit 45 mm - part B	2699 **1200**	1[1]			1[1]		
T + Bolt kit - part C	2629 **1200**		1	1		1	1
Bracket + bolt kit - part D	2639 **1200**		1			1	
Bar + bolt kit - part E	4109 **0320**			1			1

(1) Choose the bolt length according to the thickness of the bars being connected; if bar thickness is greater than 20 mm, 45 mm bolts are required.
(2) For bridging connections, quantity 2 pieces are required for creating the link between the two power terminals of the same pole for switch bodies I and II.

Fig. 2

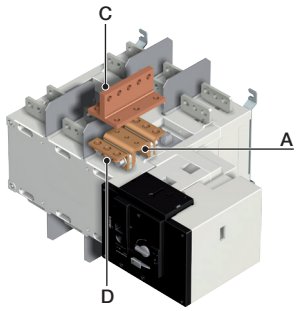

acces_460_a_1_x_cat.ai

The quantities of the applicable pieces then need to be multiplied by the number of connection points (power terminals) in order to determine the total quantity required of each part.
Example: For a 4 pole 2500 A SIRCOVER with upstream edgewise connection (Fig. 2) and downstream bridging (Fig. 3), the following quantities will be required:

Part	Upstream edgewise quantity	Downstream bridging quantity	Total quantity
A	8	8	16
B	8	8	16
C	8	4	12
D	8	0	8
E	0	4	4

Fig. 3

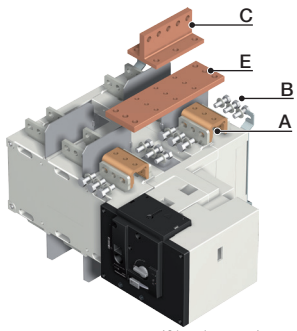

acces_461_a_1_x_cat.ai

Accessories (continued)

Auto-transformer

Use
For applications without neutral, this autotransformer provides the 230 VAC required to power these ATyS products.

Recommended autotransformer protection:
- Primary-side protection: fuse holder ref. 5701 **0020** + fuses ref 6013 **0000**
- Secondary-side protection: fuse holder ref. 5701 **0015** + fuses ref. 6013 **0001**.

Rating (A)	Frame size	Reference
125 … 3200	B3 ... B8	1599 **4064**

DC power supply

Use
Allows an ATyS to be supplied from a 24 VDC source. To be positioned as close as possible to the DC power supply source.

Rating (A)	Frame size	Operating voltage	Reference
125 … 1600	B3 … B7	24 VDC / 230 VAC	1599 **5112**

Voltage sensing tags and power supply kit

Use
For power supply and voltage measurement (4 wire, three-phase) for the ATyS g and p. Routing of the conductors is controlled, which means that no specific protective device is necessary for these connections.
The kit can be fitted on the top or bottom of the switch.
Note: the 3-pole version does not integrate the power supply.

For ATyS g and p - 3 poles

Rating (A)	Frame size	Reference
125 … 200	B3	1559 **3012**
250	B4	1559 **3025**
315 … 400	B4	1559 **3040**
500 … 630	B5	1559 **3063**
800 … 1000	B6	1559 **3080**
1250	B6	1559 **3120**
1600	B7	1559 **3160**
2000 … 3200	B8	1559 **3200**

For ATyS g and p - 4 poles

Rating (A)	Frame size	Reference
125 … 200	B3	1559 **4012**
250	B4	1559 **4025**
315 … 400	B4	1559 **4040**
500 … 630	B5	1559 **4063**
800 … 1000	B6	1559 **4080**
1250	B6	1559 **4120**
1600	B7	1559 **4160**
2000 … 3200	B8	1559 **4200**

125 to 630 A kit

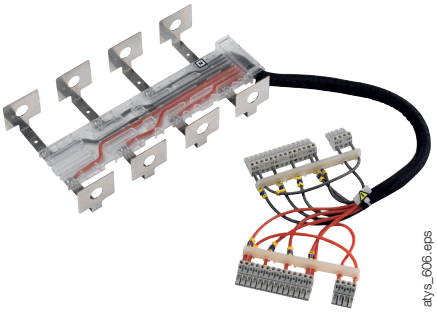

800 to 3200 A kit

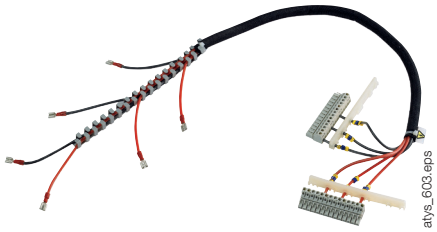

Accessories (continued)

Voltage sensing tags

Use
The voltage sensing tags are equipped with Faston connectors and can be mounted on the top or bottom side of the transfer switch. They can be used to power up a signalisation circuit or other auxiliary component, such as lighting, voltage presence indicators, etc.
For use with ATyS r, g and p. 1 pack contains 8 voltage sensing tags.
Voltage sensing tags are integrated on ATyS ≥ 800A.

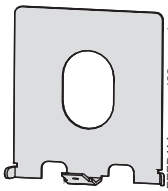
REFDAM_acces_493_a_x.ai

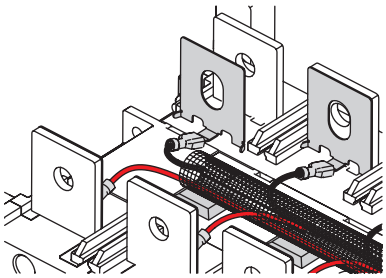
REFDAM_acces_494_a_x.ai

For ATyS r, g, p

Rating (A)	Frame size	Reference
125 … 200	B3	9599 **4020**
250 … 400	B4	9599 **4040**
500 … 630	B5	9599 **4063**

ATyS C25 cable harness

Use
The ATyS C25 cable harness is a fast and reliable solution for connecting an ATyS r transfer switch to a C25 controller in order to create an Automatic Transfer Switch. It is equipped with Faston voltage tap-offs and provides a safe connection between the controller and changeover switch for:

- monitoring availability of the incoming power sources,
- monitoring changeover switch status,
- providing an electrical interlock function,
- automatic control and transfer between power sources.

Provides a DPS auxiliary supply to the ATyS r. Cable harness length is approximately 2 metres.
The cable harness is for use with 4 pole ATyS r only and requires neutral conductors to be on the right side of the transfer switch.
For ATyS r ≤630 A it is necessary to order voltage sensing tags separately (required for voltage tap-off connections).

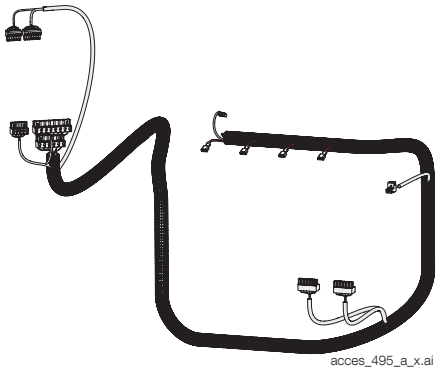
acces_495_a_x.ai

For ATyS r connection to a C25 / C35 controller

Rating (A)	Frame size	Reference
125 … 630	B3 … B5	9529 **4063**
800 … 3250	B6 … B8	9529 **4080**

Protective door surround

Use
Door surround to provide a clean and safe finish to the panel's cut-out.

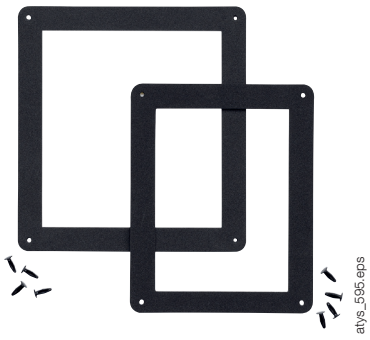
atys_595.eps

For ATyS

Rating (A)	Frame size	Reference
125 … 630	B3 ... B5	1529 **0012**
800 … 3200	B6 … B8	1529 **0080**

For ATyS d, t, g and p

Rating (A)	Frame size	Reference
125 … 630	B3 ... B5	1539 **0012**
800 … 3200	B6 … B8	1539 **0080**

Accessories (continued)

Auxiliary contact

Use

Pre-break and signalling of positions I and II: each reference provides 1 NO/NC auxiliary contact for positions I and II. Possibility to install up to 2 auxiliary contacts for each position. Suitable as 1st or 2nd auxiliary contact.
As standard, 1 NO auxiliary contact is provided for all three positions. Low level AC: contact us.

Rating (A)	Frame size	Rated current (A)	Operating current I_e (A)			
			250 VAC AC-13	400 VAC AC-13	24 VDC DC-13	48 VDC DC-13
125 … 3200	B3 ... B8	16	12	8	14	6

Rating (A)	Frame size	Mounting type(1)	Reference
125 … 630	B3 ... B5	Customer fit	1599 **0502**
800 … 1600	B6 … B7	Customer fit	1599 **0532**
2000 … 3200	B8	-	2 AC per position fitted as standard.

(1) For factory assembly, please contact us.

800 to 1600 A

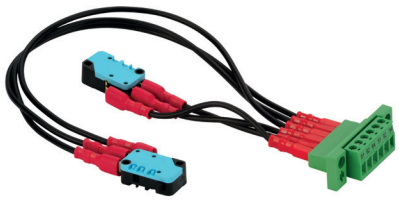
acces_396.eps

Please contact us if you need more auxiliary contacts.

125 to 630 A

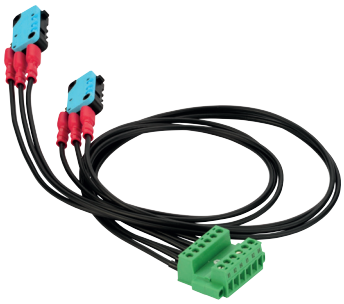
acces_397.eps

3 position padlocking (I - 0 - II)

Use

Enables the product to be padlocked in positions 0, I and II (factory fitted).

Rating (A)	Frame size	Reference
125 … 630	B3 ... B5	9599 **0003**
800 … 3200	B6 … B8	9599 **0004**

atys_867.eps

Key handle interlocking system

Use

With the product in manual mode, it enables locking in position 0 using a RONIS EL11AP lock (factory fitted).
As standard, locking in position 0.
With the 3 position padlocking accessory: key interlocking in I, 0 & II.

Lock (random number):
- RONIS EL11AP ref. 4409 **8511**
- TRAYVOU XOP10 ref. 4409 **8601**

Rating (A)	Frame size	Reference
125 … 630	B3 ... B5	9599 **1006**
800 … 3200	B6 … B8	9599 **1004**

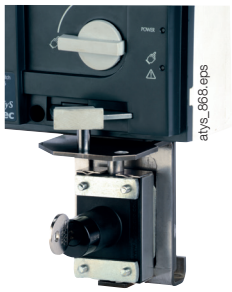
atys_868.eps

Current transformer

Use - for ATyS p only

Used with ATyS p units, these current transformers enable information to be obtained on the load current.

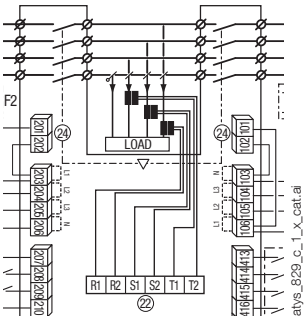

atys_829_c_1_X_cat.ai

trafo_025.eps

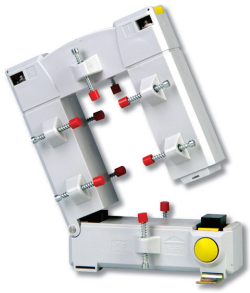
trafo_077.eps

Accessories (continued)

Optional plug-in modules

Use - for ATyS g and p
Number of modules per device
ATyS g: One module maximum can be installed (can be fitted in any slot).
ATyS p: A maximum of four modules can be fitted. With Ethernet communication module installation, only 2 additional modules can be fitted.

atys_016.eps

diris_447.eps

RS485 JBUS / MODBUS® communication.
- RS485 link with JBUS / MODBUS® protocol (speed up to 38400 bauds).

diris_449.eps

2 inputs - 2 outputs
- 2 inputs and 2 outputs (programmable) on each module.

diris_777.eps

Ethernet communication
- Ethernet link with MODBUS/TCP or JBUS/MODBUS RTU over TCP.
- Embedded Ethernet Web server software.

diris_776.eps

Ethernet communication with RS485 JBUS/MODBUS gateway
- Ethernet link with MODBUS/TCP or JBUS/MODBUS RTU over TCP.
- Connect 1 to 247 RS485 JBUS/MODBUS slaves.
- Embedded Ethernet Web server software.

diris_448.eps

Analogue outputs
- Allocate outputs to: 3I, In, 3V, 3U, F, ±∑P, ±∑Q, ∑S.

diris_445.eps

Pulse outputs
- 2 configurable pulse outputs (type, weight and duration) on ±kWh, ±kVArh and kVAh.

Description of accessories	Suitable for	Reference
RS485 MODBUS communication	ATyS g, p	4825 **0092**
2 inputs - 2 outputs	ATyS p	1599 **2001**
Ethernet communication (embedded Ethernet Web server software)	ATyS p	4825 **0203**
Ethernet communication + RS485 JBUS/MODBUS gateway (embedded Ethernet Web server software)	ATyS p	4825 **0204**
Analogue outputs	ATyS p	4825 **0093**
Pulse outputs	ATyS p	4825 **0090**

Accessories (continued)

Auxiliary contact

Use
To display source availability and position indication on the front of a panel when the ATyS automatic transfer switch is enclosed.
Interfaces are powered from the ATyS transfer switch via the RJ45 connection cable.
Maximum cable length: 3 m.

D10 - for ATyS p
To display source availability and position indication on the front panel of an enclosure.
Ingress Protection rating: IP21

D20 - for ATyS p
In addition to the functions of the D10, the D20 displays measurements and enables control and configuration from the front of a panel.
Ingress Protection rating: IP21

Door mounted
2 holes Ø 22.5.
ATyS transfer switch via RJ45 cable, unshielded. Cable available as an accessory.

atys_597.eps

RJ45 port to connect to ATyS.

atys_564.eps

atys_565.eps

Drillings

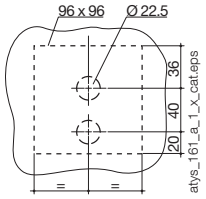

atys_161_a_1_x_cat.eps

Description of accessories	Suitable for	Reference
D10	ATyS g	9599 **2010**
D20	ATyS p	9599 **2020**

Connecting cable for remote interfaces

Use
To connect between a remote interface (type D10 or D20) and a control product (ATyS g or p).

Characteristics
RJ45 8-wire straight unshielded cables, length 3 m.

For ATyS g and p

Type	Length	Reference
RJ45 cable	3 m	1599 **2009**

acces_209.eps

Sealable cover

Use - for ATyS g
Prevents access to the configuration of ATyS g devices (seals supplied).

Rating (A)	Frame size	Reference
125 … 3200	B3 ... B8	9599 **0000**

atys_870.eps

Auto/Manual key selector

Use
Replaces the standard Auto/Manual selector knob with a key selector.

Rating (A)	Frame size	Reference
125 … 3200	B3 ... B8	9599 **1007**

atys_869.eps

Accessories (continued)

Auto/Manual key selector

Use
Allows an ATyS r to be supplied by two 230 VAC, 50/60 Hz networks.

	ATyS DPS	Modular DPS
Voltage (VAC)		
Min.	166	200
Max.	332	288
Current (A)		
Max. output	15	3.15
Connection (mm²)		
Max.	2.5	6

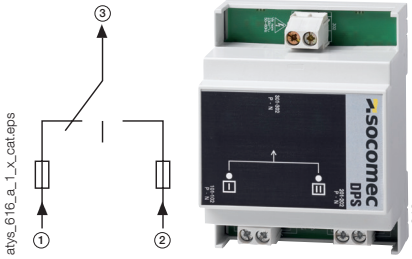

Description	Suitable for ATyS r	Reference
Modular DPS	125 … 1600 A	1599 **4001**
ATyS DPS	125 … 3200 A	9539 **2001**

Spares

ATyS p front panel

This front panel label is used (for ATyS p only) if source 2 is connected to switch body I and source 1 is connected to switch body II. Positions I and II are reversed on the front panel.

Model	Reference
ATyS p	9599 **1008**

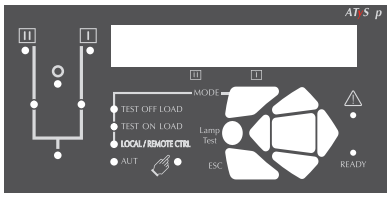

Electronic module - controller

The electrical components of the ATyS g and p are easy to replace in case there is a problem, even when on-load.

Model	Reference
ATyS g	9559 **2001**
ATyS p	9579 **2001**

Motorisation module

The motor units of the ATyS r, g and p are easy to replace in case there is a problem, even when on-load.

Rating (A)	Reference
125 … 200	9509 **5020**
250 … 400	9509 **5040**
500 … 630	9509 **5063**
800 … 1250	9509 **5120**
1600	9509 **5160**
2000 … 3200	9509 **5320**

Characteristics according to IEC 60947-3 and IEC 60947-6-1

125 to 630 A

Thermal current I_{th} at 40 °C (A)		**125 A**	**160 A**	**200 A**	**250 A**	**315 A**	**400 A**	**500 A**	**630 A**
Frame size		**B3**	**B3**	**B3**	**B4**	**B4**	**B4**	**B5**	**B5**
Rated insulation voltage U_i (V) (Power circuit)		800	800	800	1000	1000	1000	1000	1000
Rated impulse withstand voltage U_{imp} (kV) (power circuit)		8	8	8	12	12	12	12	12
Rated insulation voltage U_i (V) (control circuit)		300	300	300	300	300	300	300	300
Rated impulse withstand voltage U_{imp} (kV) (control circuit)		4	4	4	4	4	4	4	4
Rated operational currents I_e (A) according to IEC 60947-6-1									
Nominal voltage	**Utilisation category**								
415 VAC	AC-31 B	125	160	200	250	315	400	500	630
415 VAC	AC-32 B				200	315	400	500	500
415 VAC	AC-33 B				200	200	200	400	400
Rated operational currents I_e (A) according to IEC 60947-3									
Nominal voltage	**Utilisation category**	**A/B(1)**	**A/B(1)**	**A/B(1)**	**A/B(1)**	**A/B(1)**	**A/B(1)**	**A/B(1)**	**A/B(1)**
415 VAC	AC-21 A / AC-21 B	125/125	160/160	200/200	250/250	315/315	400/400	500/500	630/630
415 VAC	AC-22 A / AC-22 B	125/125	160/160	200/200	250/250	315/315	400/400	500/500	630/630
415 VAC	AC-23 A / AC-23 B	125/125	160/160	200/200	200/200	315/315	400/400	500/500	500 /630
500 VAC	AC-21 A / AC-21 B	125/125	160/160	200/200	250/250	315/315	400/400	500/500	630/630
500 VAC	AC-22 A / AC-22 B	125/125	160/160	200/200	200/250	200/315	200/400	500/500	500/500
500 VAC	AC-23 A / AC-23 B	80/80	80/80	80/80	200/200	200/200	200/200	400/400	400/400
690 VAC(3)	AC-21 A / AC-21 B	125/125	160/160	200/200	200/200	200/200	200/200	500/500	500/500
690 VAC(3)	AC-22 A / AC-22 B	125/125	125/125	125/125	160/160	160/160	160/160	400/400	400/400
690 VAC(3)	AC-23 A / AC-23 B	63/80	63/80	63/80	125/125	125/125	125/125	400/400	400/400
220 VDC	DC-21 A / DC-21 B	125/125	160/160	200/200	250/250	250/250	250/250	500/500	630/630
220 VDC	DC-22 A / DC-22 B	125/125	160/160	200/200	250/250	250/250	250/250	500/500	630/630
220 VDC	DC-23 A / DC-23 B	125/125	125/125	125/125	200/200	200/200	200/200	500/500	630/630
440 VDC (2)	DC-21 A / DC-21 B	125/125	125/125	125/125	200/200	200/200	200/200	500/500	630/630
440 VDC (2)	DC-22 A / DC-22 B	125/125	125/125	125/125	200/200	200/200	200/200	500/500	630/630
440 VDC (2)	DC-23 A / DC-23 B	125/125	125/125	125/125	200/200	200/200	200/200	500/500	630/630
Rated conditional short-circuit current with gG fuse, according to IEC 60947-3									
Prospective short-circuit current with fuse at 415 VAC (kA rms)		100	100	50	50	50	50	50	50
Prospective short-circuit current with fuse at 690 VAC (kA rms)					50	50	50	50	50
Associated fuse rating (A)		125	160	200	250	315	400	500	630
Short-circuit withstand without protection as per IEC 60947-3									
Rated short-term withstand current 0.3 s I_{cw} at 415 VAC (kA rms)		12	12	12	15 (4)	15 (4)	15 (4)	17 (4)	17 (4)
Rated short-term withstand current 1 s I_{cw} at 415 VAC (kA rms)		7	7	7	8 (4)	8 (4)	8 (4)	11 (4)	10 (4)
Rated peak withstand current at 415 VAC (kA peak)		20	20	20	30	30	30	45	45
Connection									
Minimum Cu cable cross-section as per IEC 60947-1 (mm²)		35	35	50	95	120	185	2 x 95	2 x 120
Recommended Cu busbar cross-section (mm²)								2 x 32 x 5	2 x 40 x 5
Maximum copper cable cross-section (mm²)		50	95	120	150	240	240	2 x 185	2 x 300
Maximum width of copper bars (mm)		25	25	25	32	32	32	50	50
Min./Max. tightening torque (Nm)		9/13	9/13	9/13	20/26	20/26	20/26	40/45	40/45
Dissipated power (W/pole)		1.9	3.2	4.1	5.9	7.8	15.1	17	32.4
Switching time (rated voltage, after receiving command)									
Transfer time I-II or II-I (s)		0.85	0.85	0.85	0.9	0.9	0.9	0.95	0.95
I-0 or II-0 (s)		0.55	0.55	0.55	0.5	0.5	0.5	0.55	0.55
Time of contact transfer ("black-out" I-II) minimum (s)		0.3	0.3	0.3	0.4	0.4	0.4	0.4	0.4
Power supply									
Min./max. auxiliary power supply (VAC)		166/332	166/332	166/332	166/332	166/332	166/332	166/332	166/332
Control supply power demand									
Inrush / nominal power (VA) - ATyS r		184/92	184/92	184/92	276/115	276/115	276/115	276/150	276/150
Inrush / nominal power (VA) - ATyS g, p		206/114	206/114	206/114	298/137	298/137	298/137	298/172	298/172
Mechanical characteristics									
Durability (number of operating cycles)		10,000	10,000	10,000	8,000	8,000	8,000	5,000	5,000
Weight ATyS r 3 P / 4 P (kg)		5.7 / 6.9	5.7 / 6.9	5.7 / 6.9	6.6 / 7.4	6.7 / 7.8	6.7 / 7.8	11.4 / 13.3	11.9 / 14.0
Weight ATyS g, p 3 P / 4 P (kg)		6.8 / 8.0	6.8 / 8.0	6.8 / 8.0	7.7 / 8.5	7.8 / 8.9	7.8 / 8.9	12.5 / 14.4	13.0 / 15.1

(1) Category with index A = frequent operation / Category with index B = infrequent operation.
(2) 3-pole device with 2 poles in series for the '+' and 1 pole for the '-'. 4-pole device with 2 poles in series per polarity.
(3) Interphase barriers must be installed on the products.
(4) Values given at 690 VAC.

Characteristics according to IEC 60947-3 and IEC 60947-6-1

800 to 3200 A

Thermal current I_{th} at 40 °C		**800 A**	**1000 A**	**1250 A**	**1600 A**	**2000 A**	**2500 A**	**3200 A**
Frame size		**B6**	**B6**	**B6**	**B7**	**B8**	**B8**	**B8**
Rated insulation voltage U_i (V) (Power circuit)		1000	1000	1000	1000	1000	1000	1000
Rated impulse withstand voltage U_{imp} (kV) (power circuit)		12	12	12	12	12	12	12
Rated insulation voltage U_i (V) (control circuit)		300	300	300	300	300	300	300
Rated impulse withstand voltage U_{imp} (kV) (control circuit)		4	4	4	4	4	4	4
Rated operational currents I_e (A) according to IEC 60947-6-1								
Nominal voltage	**Utilisation category**							
415 VAC	AC-31 B	800	1000	1250	1600	2000	2500	3200
415 VAC	AC-32 B	800	1000	1250	1250	2000	2000	2000
415 VAC	AC-33 B	800	1000	1000	1000	1250	1250	1250
Rated operational currents I_e (A) according to IEC 60947-3								
Nominal voltage	**Utilisation category**	**A/B(1)**	**A/B(1)**	**A/B(1)**	**A/B(1)**	**A/B(1)**	**A/B(1)**	**A/B(1)**
415 VAC	AC-21 A / AC-21 B	800/800	1000/1000	1250/1250	1600/1600	-/2000	-/2500	-/3200
415 VAC	AC-22 A / AC-22 B	800/800	1000/1000	1250/1250	1600/1600	-/2000	-/2500	-/3200
415 VAC	AC-23 A / AC-23 B	800/800	1000/1000	1250/1250	1250/1250	-/1600	-/1600	-/1600
500 VAC	AC-21 A / AC-21 B	800/800	1000/1000	1250/1250	1600/1600	-/2000	-/2000	-/2000
500 VAC	AC-22 A / AC-22 B	630/630	800/800	1000/1000	1600/1600			
500 VAC	AC-23 A / AC-23 B	630/630	630/630	800/800	1000/1000			
690 VAC(3)	AC-21 A / AC-21 B	800/800	1000/1000	1250/1250	1600/1600	-/2000	-/2000	-/2000
690 VAC(3)	AC-22 A / AC-22 B	630/630	800/800	1000/1000	1000/1000			
690 VAC(3)	AC-23 A / AC-23 B	630/630	630/630	800/800	800/800			
220 VDC	DC-21 A / DC-21 B	800/800	1000/1000	1250/1250	1250/1250			
220 VDC	DC-22 A / DC-22 B	800/800	1000/1000	1250/1250	1250/1250			
220 VDC	DC-23 A / DC-23 B	800/800	1000/1000	1250/1250	1250/1250			
440 VDC (2)	DC-21 A / DC-21 B	800/800	1000/1000	1250/1250	1250/1250			
440 VDC (2)	DC-22 A / DC-22 B	800/800	1000/1000	1250/1250	1250/1250			
440 VDC (2)	DC-23 A / DC-23 B	800/800	1000/1000	1250/1250	1250/1250			
Rated conditional short-circuit current with gG fuse, according to IEC 60947-3								
Prospective short-circuit current with fuse at 415 VAC (kA rms)		50	50	100	100			
Prospective short-circuit current with fuse at 690 VAC (kA rms)		50	50	50				
Associated fuse rating (A)		800	1000	1250	2x800			
Short-circuit withstand without protection as per IEC 60947-3								
Rated short-term withstand current 0.3 s I_{cw} at 415 VAC (kA rms)		64	64	64	78	78	78	78
Rated short-term withstand current 1 s I_{cw} at 415 VAC (kA rms)		35	35	35	50	50	50	50
Rated peak withstand current at 415 VAC (kA peak)		55	55	80	110	120	120	120
Connection								
Minimum Cu cable cross-section as per IEC 60947-1 (mm²)		2 x 185						
Recommended Cu busbar cross-section (mm²)		2 x 50 x 5	2 x 63 x 5	2 x 60 x7	2 x 100 x 5	3 x 100 x 5	2 x 100 x 10	3 x 100 x 10
Maximum copper cable cross-section (mm²)		4 x 185	4 x 185	4 x 185	6 x 185			
Maximum width of copper bars (mm)		63	63	63	100	100	100	100
Min./Max. tightening torque (Nm)		9/13	9/13	20/26	40/45	40/45	40/45	40/45
Dissipated power (W/pole)		7	46.9	93.3	122	178	255	330
Switching time (rated voltage, after receiving command)								
Transfer time I-II or II-I (s)		2.8	2.8	2.8	2.9	2.8	2.8	2.8
I-0 or II-0 (s)		1.4	1.4	1.4	1.4	1.8	1.8	1.8
Time of contact transfer ("black-out" I-II) minimum (s)		1.4	1.4	1.4	1.5	1	1	1
Power supply								
Min./max. auxiliary power supply (VAC)		166/332	166/332	166/332	166/332	166/332	166/332	166/332
Control supply power demand								
Inrush / nominal power (VA) - ATyS r		460/184	460/184	460/184	460/230	812/322	812/322	812/322
Inrush / nominal power (VA) - ATyS g, p		482/206	482/206	482/206	482/252	834/344	834/344	834/344
Mechanical characteristics								
Durability (number of operating cycles)		4,000	4,000	4,000	3,000	3,000	3,000	3,000
Weight ATyS r 3 P / 4 P (kg)		27.9 / 32.2	28.4 / 32.9	28.9 / 33.6	33.1 / 39.4	50.7 / 61.6	50.7 / 61.6	61.0 / 75.3
Weight ATyS g, p 3 P / 4 P (kg)		29.0 / 33.3	29.5 / 34.0	30.0 / 34.7	34.2 / 40.5	51.8 / 62.7	51.8 / 62.7	62.1 / 76.4

(1) Category with index A = frequent operation / Category with index B = infrequent operation.
(2) 3-pole device with 2 poles in series for the '+' and 1 pole for the '-'. 4-pole device with 2 poles in series per polarity.
(3) Interphase barriers must be installed on the products.
(4) Values given at 690 VAC.

Connections and terminals

ATyS r

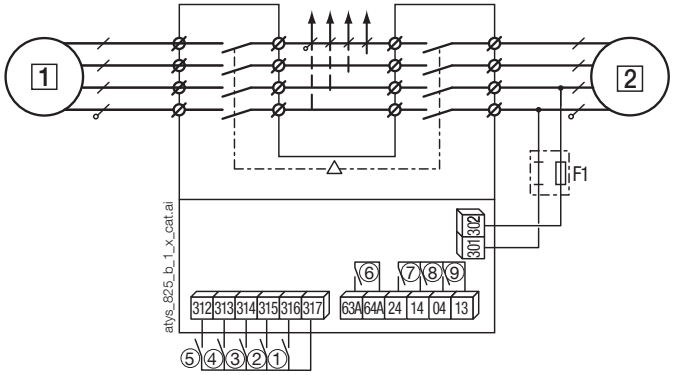

1 primary source (mains network or genset)
2 backup source (mains network or genset)

1. control position 0 (contactor logic if kept closed)
2. position I control
3. position II control
4. priority control position 0
5. closing this contact allows position control commands
6. product availability relay
7. auxiliary contact - closed when the switch is in position II
8. auxiliary contact - closed when the switch is in position I
9. auxiliary contact - closed when the switch is in position 0

ATyS r with *ATyS DPS*

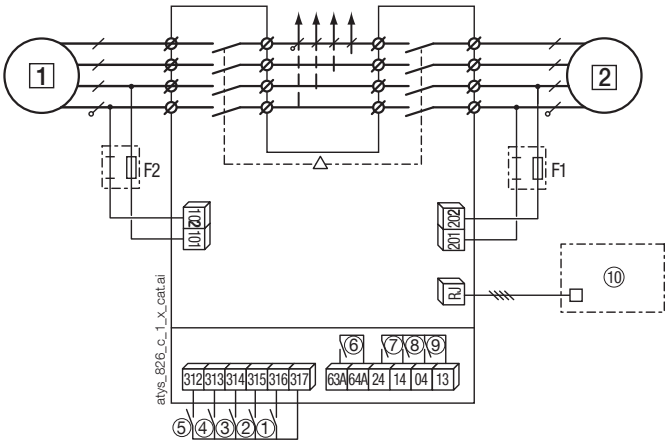

1 primary source (mains network or genset)
2 backup source (mains network or genset)

1. control position 0 (contactor logic if kept closed)
2. position I control
3. position II control
4. priority control position 0
5. closing this contact allows position control commands
6. product availability relay
7. auxiliary contact - closed when the switch is in position II
8. auxiliary contact - closed when the switch is in position I
9. auxiliary contact - closed when the switch is in position 0
10. D10 remote interface

Connections and terminals (continued)

ATyS g

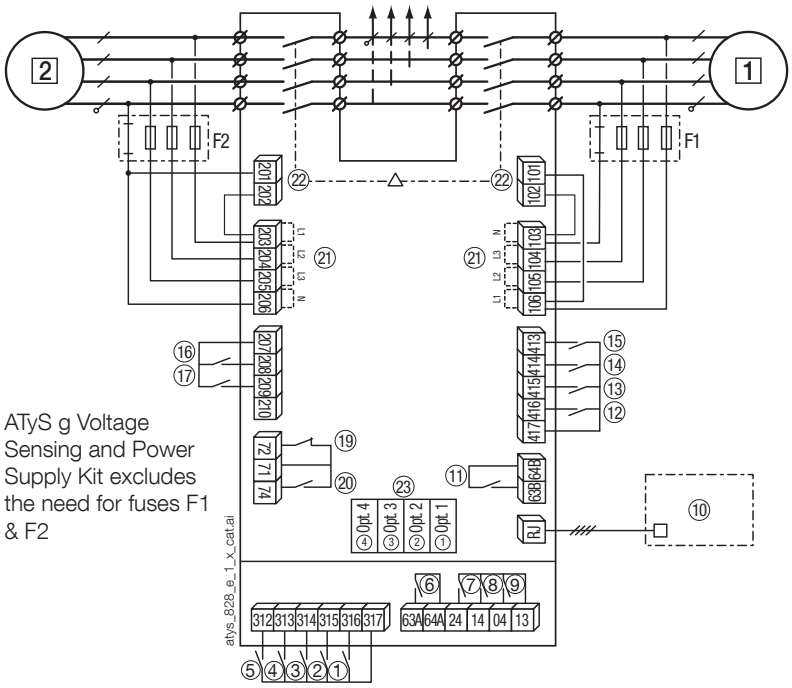

ATyS g Voltage Sensing and Power Supply Kit excludes the need for fuses F1 & F2

1 Primary source (mains network)
2 Backup source (genset or network)

1. control position 0 (contactor logic if kept closed)
2. position I control
3. position II control
4. priority control position 0
5. closing this contact allows position control commands
6. Motor unit availability relay
7. auxiliary contact - closed when the switch is in position II
8. auxiliary contact - closed when the switch is in position I
9. auxiliary contact - closed when the switch is in position 0
10. D10 remote display
11. Controller availability relay
12. automatic operation inhibited
13. confirm manual retransfer
14. bypass for time delay 2AT
15. M/G: priority test on load. M/M: with or without priority
16. remote test without load
17. M/G: test on load. M/M: preferred source selection
19-20. genset start and stop commands

Operating handle	71/72 (19)	71/74 (20)
Genset start-up	Closed contact	Open contact
Genset stop	Open contact	Closed contact

21. voltage inputs
22. power inputs
23. 4 slots for optional RS485 communication module

ATyS p

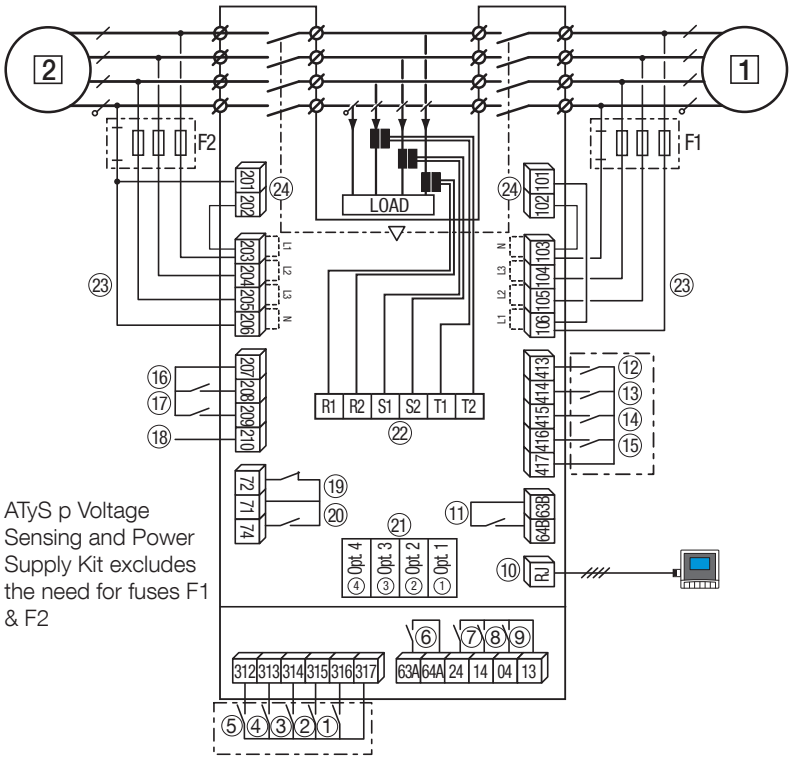

ATyS p Voltage Sensing and Power Supply Kit excludes the need for fuses F1 & F2

1 primary source (mains network or genset)
2 backup source (mains network or genset)

1. control position 0 (contactor logic if kept closed)
2. position I control
3. control position II
4. priority control position 0
5. closing this contact allows position control commands
6. Motor unit availability relay
7. auxiliary contact - closed when the switch is in position II
8. auxiliary contact - closed when the switch is in position I
9. auxiliary contact - closed when the switch is in position 0
10. D20 remote interface
11. Controller availability relayvoltage inputs
12-17. programmable inputs
18. auxiliary power supply for optional modules
19-20. genset start and stop commands

Operating handle	71/72 (19)	71/74 (20)
Genset start-up	Closed contact	Open contact
Genset stop	Open contact	Closed contact

21. 4 slots for optional modules
22. CT measurement connection
23. voltage inputs
24. power inputs

Dimensions

125 to 630 A / B3 to B5

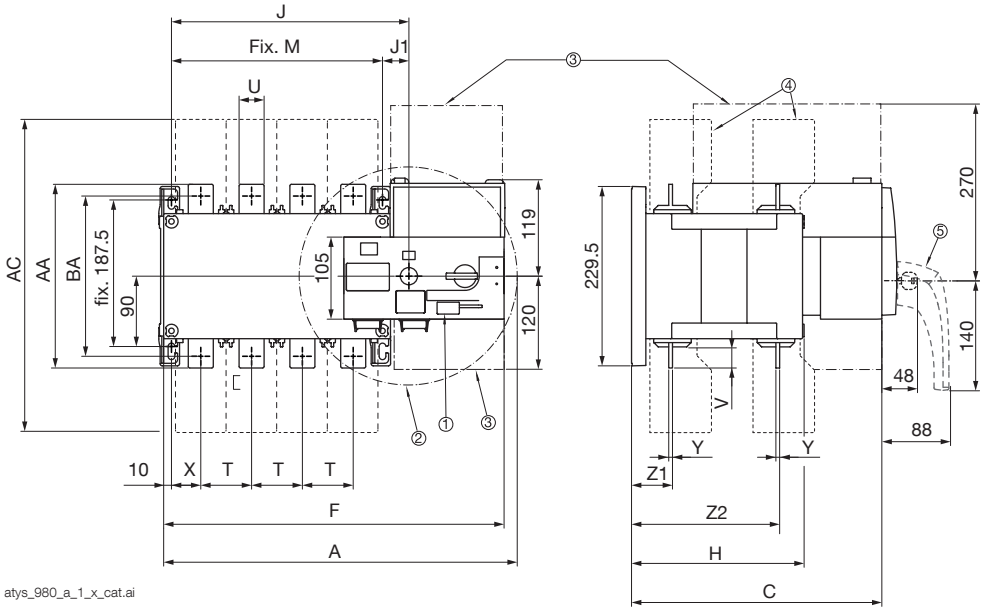

1. Locking bracket for up to 3 padlocks
2. Maximum handle operating radius with an operating angle of 2 x 90°
3. Control connection and disconnection area
4. Phase barriers
5. Emergency removable handle

Rating (A) /Frame size	Perimeter dimensions			Terminal shrouds	Case						Mounting accessory		Connection											
	A 3p.	A 4p.	C	AC	F 3p.	F 4p.	H	J 3p.	J 4p.	J1	M 3p.	M 4p.	T	U	V	W	X 3p.	X 4p.	Y	Z1	Z2	AA	BA	CA
125 / B3	304	334	244	233	286.5	317	151	154	184	34	120	250	36	20	25	9	28	22	3.5	38	134	135	115	10
160 / B3	304	334	244	233	286.5	317	151	154	184	34	120	250	36	20	25	9	28	22	3.5	38	134	135	115	10
200 / B3	304	334	244	233	286.5	317	151	154	184	34	120	250	36	20	25	9	28	22	3.5	38	134	135	115	10
250 / B4	345	395	244	288	328	378	152	195	245	35	160	210	50	25	30	11	33	33	3.5	39.5	133.5	160	130	15
315 / B4	345	395	244	288	328	378	152	195	245	35	160	210	50	35	35	11	33	33	3.5	39.5	133.5	160	130	15
400 / B4	345	395	244	288	328	378	152	195	245	35	160	210	50	35	35	11	33	33	3.5	39.5	133.5	170	140	15
500 / B5	394	454	321	402	377	437	221	244	304	34	210	270	65	32	50	14	42.5	37.5	5	53	190	260	220	20
630 / B5	394	454	321	402	377	437	221	244	304	34	210	270	65	45	50	13	42.5	37.5	5	53	190	260	220	20

800 to 1600 A / B6 to B7

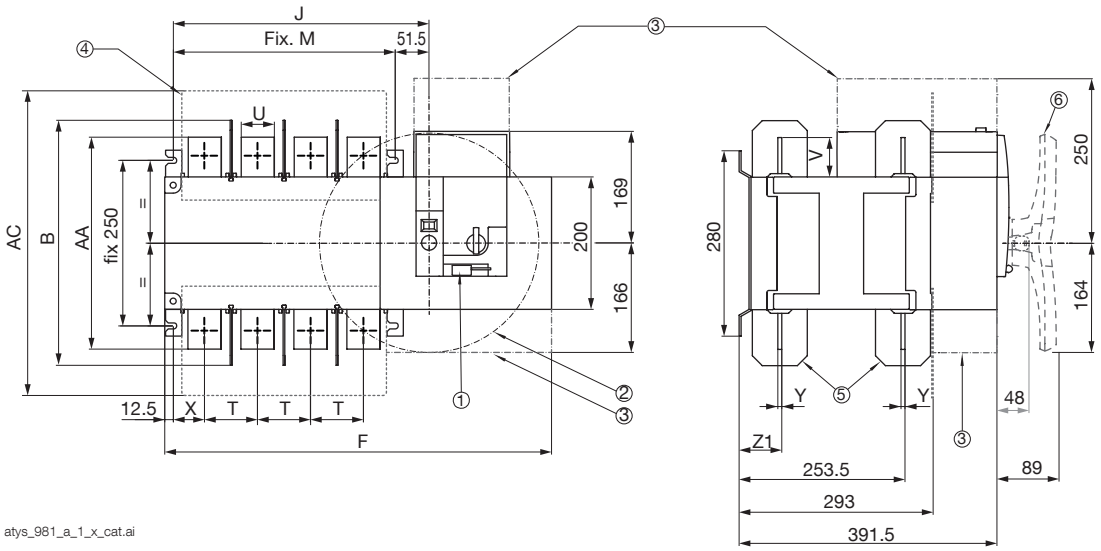

1. Locking bracket for up to 3 padlocks
2. Maximum handle operating radius with an operating angle of 2 x 90°
3. Control connection and disconnection area
4. Terminal screens
5. Phase barriers
6. Emergency removable handle

Rating (A) / Frame size	Perimeter dimensions	Terminal shrouds	Case				Mounting accessory		Connection						
	B	AC	F 3p.	F 4p.	J 3p.	J 4p.	M 3p.	M 4p.	T	U	V	X	Y	Z1	AA
800 / B6	370	461	504	584	307	387	255	335	80	50	60.5	47.5	7	66.5	321
1000 / B6	370	461	504	584	307	387	255	335	80	50	60.5	47.5	7	66.5	321
1250 / B6	370	461	504	584	307	387	255	335	80	60	65	47.5	7	66.5	330
1600/B7	380	531	596	716	399	519	347	467	120	90	44	53	8	67.5	288

Dimensions (continued)

2000 to 3200 A / B8

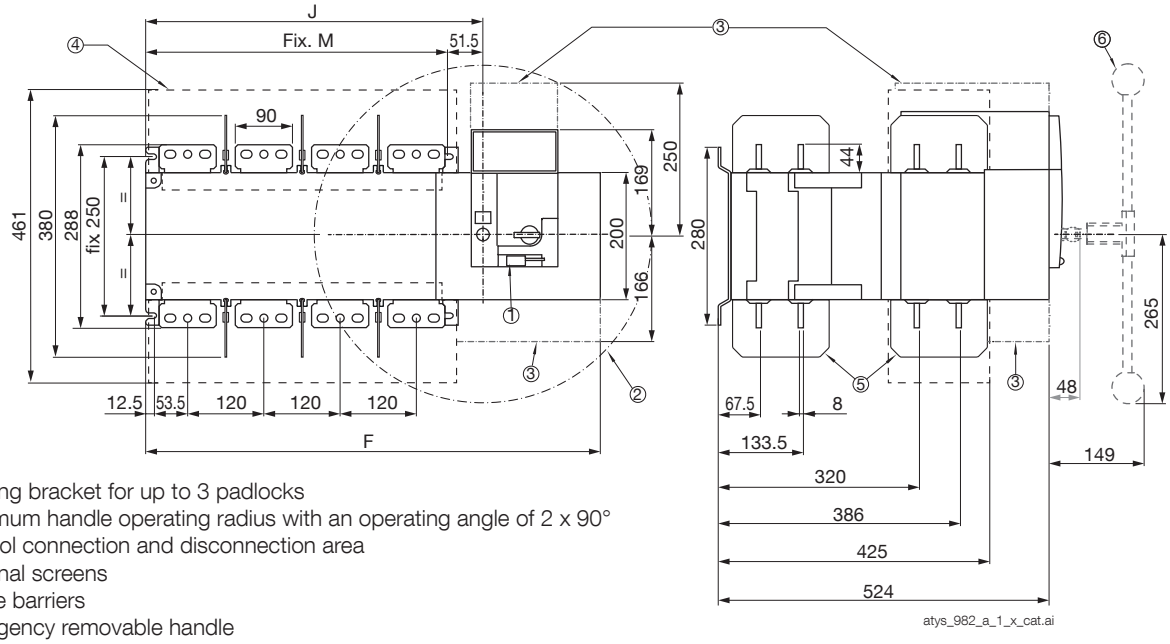

1. Locking bracket for up to 3 padlocks
2. Maximum handle operating radius with an operating angle of 2 x 90°
3. Control connection and disconnection area
4. Terminal screens
5. Phase barriers
6. Emergency removable handle

Rating (A)	Case				Mounting accessory	
	F 3p.	F 4p.	J 3p.	J 4p.	M 3p.	M 4p.
2000 … 3200	596	716	398.5	518.5	347	467

Door cutout

125 to 630 A / B3 to B5

ATyS r

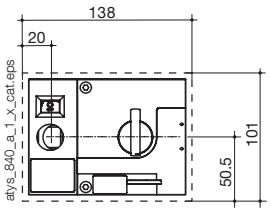

ATyS g, p

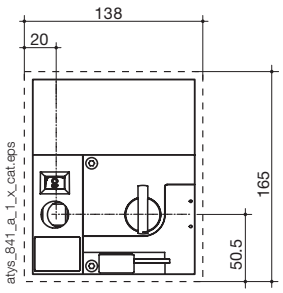

800 to 1600 A / B6 to B7

ATyS r

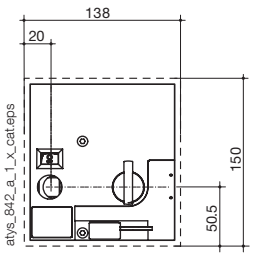

ATyS g, p

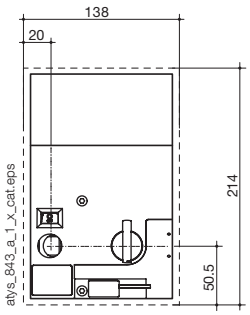

Door cutout

800 to 1000 A / B6

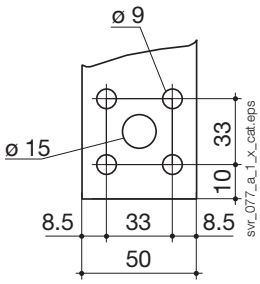

1250 A / B6

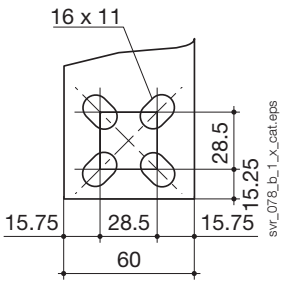
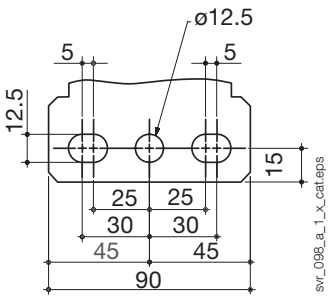
1600 to 3200 A / B7 to B8