SC 3.81/03/90F 3.2SN BK BX

Weidmüller Interface GmbH & Co. KG
Klingenbergstraße 26
D-32758 Detmold
Germany

www.weidmueller.com

Product image

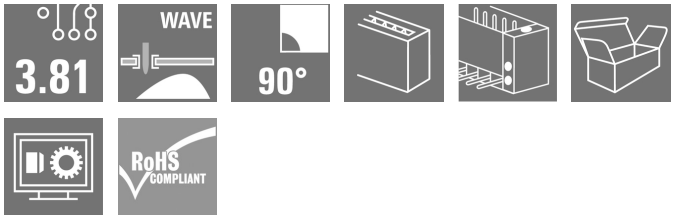

The SC pin header has a parallel (recumbent) plugging direction in relation to the PCB. It is available in closed (G) and screw flange (F) versions.
Weidmüller's 3.81-mm-pitch (0.15 inch) plug-in connectors are compatible with the layouts of standard connectors. They support a flood-light display and offer space for labelling and coding.

General ordering data

Version	PCB plug-in connector, male header, Flange, THT solder connection, 3.81 mm, Number of poles: 3, 90°, Solder pin length (l): 3.2 mm, tinned, black, Box
Order No.	1793340000
Type	SC 3.81/03/90F 3.2SN BK BX
GTIN (EAN)	4032248378333
Qty.	78 pc(s).
Product data	IEC: 320 V / 17.5 A UL: 300 V / 10 A
Packaging	Box

Creation date May 11, 2025 7:22:17 PM CEST

SC 3.81/03/90F 3.2SN BK BX

Weidmüller Interface GmbH & Co. KG
Klingenbergstraße 26
D-32758 Detmold
Germany

www.weidmueller.com

Technical data

Dimensions and weights

Depth	9.2 mm	Depth (inches)	0.362 inch
Height	10.3 mm	Height (inches)	0.406 inch
Height of lowest version	7.1 mm	Width	22.03 mm
Width (inches)	0.867 inch	Net weight	1.321 g

System specifications

Product family	OMNIMATE Signal - series BC/SC 3.81	Type of connection	Board connection
Mounting onto the PCB	THT solder connection	Pitch in mm (P)	3.81 mm
Pitch in inches (P)	0.15 "	Outgoing elbow	90°
Number of poles	3	Number of solder pins per pole	1
Solder pin length (l)	3.2 mm	Solder pin length tolerance	0 / -0.2 mm
Solder pin dimensions	d = 1.0 mm, Octagonal	Solder pin dimensions = d tolerance	0 / -0,03 mm
Solder eyelet hole diameter (D)	1.2 mm	Solder eyelet hole diameter tolerance (D)	+ 0,1 mm
L1 in mm	7.62 mm	L1 in inches	0.3 "
Number of rows	1	Pin series quantity	1
Touch-safe protection acc. to DIN VDE 57 106	finger-safe unplugged/ back-of-hand-safe plugged	Touch-safe protection acc. to DIN VDE 0470	IP20 plugged/ IP10 un-plugged
Volume resistance	≤5 mΩ	Can be coded	Yes
Plugging force/pole, max.	7 N	Pulling force/pole, max.	5 N

Material data

Insulating material	PA GF	Colour	black
Colour chart (similar)	RAL 9011	Insulating material group	II
Comparative Tracking Index (CTI)	≥ 550	UL 94 flammability rating	V-0
Contact material	Cu-alloy	Contact surface	tinned
Storage temperature, min.	-40 °C	Storage temperature, max.	70 °C
Operating temperature, min.	-50 °C	Operating temperature, max.	120 °C
Temperature range, installation, min.	-25 °C	Temperature range, installation, max.	120 °C

Rated data acc. to IEC

tested acc. to standard	IEC 60664-1, IEC 61984	Rated current, min. number of poles (Tu=20°C)	17.5 A
Rated current, max. number of poles (Tu=20°C)	17.5 A	Rated current, min. number of poles (Tu=40°C)	17.5 A
Rated current, max. number of poles (Tu=40°C)	16.3 A	Rated voltage for surge voltage class / pollution degree II/2	320 V
Rated voltage for surge voltage class / pollution degree III/2	160 V	Rated voltage for surge voltage class / pollution degree III/3	160 V
Rated impulse voltage for surge voltage class/ pollution degree II/2	2.5 kV	Rated impulse voltage for surge voltage class/ pollution degree III/2	2.5 kV
Rated impulse voltage for surge voltage class/ contamination degree III/3	2.5 kV	Short-time withstand current resistance	3 x 1s with 76 A

Rated data acc. to CSA

Rated voltage (Use group B / CSA)	300 V	Rated current (Use group B / CSA)	8 A

SC 3.81/03/90F 3.2SN BK BX

Weidmüller Interface GmbH & Co. KG
Klingenbergstraße 26
D-32758 Detmold
Germany

www.weidmueller.com

Technical data

Rated data acc. to UL 1059

Institute (cURus)		Certificate No. (cURus)	E60693
Rated voltage (Use group B / UL 1059)	300 V	Rated voltage (Use group D / UL 1059)	300 V
Rated current (Use group B / UL 1059)	10 A	Rated current (Use group D / UL 1059)	10 A
Reference to approval values	Specifications are maximum values, details - see approval certificate.		

Packing

Packaging	Box	VPE length	350 mm
VPE width	140 mm	VPE height	31 mm

Classifications

ETIM 6.0	EC002637	ETIM 7.0	EC002637
ETIM 8.0	EC002637	ETIM 9.0	EC002637
ETIM 10.0	EC002637	ECLASS 9.0	27-44-04-02
ECLASS 9.1	27-44-04-02	ECLASS 10.0	27-44-04-02
ECLASS 11.0	27-46-02-01	ECLASS 12.0	27-46-02-01
ECLASS 13.0	27-46-02-01	ECLASS 14.0	27-46-02-01
ECLASS 15.0	27-46-02-01		

Environmental Product Compliance

RoHS Compliance Status	Compliant with exemption
RoHS Exemption (if applicable/known)	6c
REACH SVHC	Lead 7439-92-1
SCIP	308576ca-4abc-409a-b0d0-6626109a7446

Important note

IPC conformity	Conformity: The products are developed, manufactured and delivered according international recognized standards and norms and comply with the assured properties in the data sheet resp. fulfill decorative properties in accordance with IPC-A-610 "Class 2". Further claims on the products can be evaluated on request.
Notes	• Additional variants on request • Rated current related to rated cross-section & min. No. of poles. • Rated data refer only to the component itself. Clearance and creepage distances to other components are to be designed in accordance with the relevant application standards. • P on drawing = pitch • For additional mechanical support for male connectors with screw flange (...F), we recommend an additional cable gland with fastening screws (sheet metal screw ISO 1481-ST 2.2x4.5 C or ISO 7049-ST 2.2x4.5 C – see Accessories). Cable gland only permitted before soldering. • In accordance with IEC 61984, OMNIMATE-connectors are connectors without breaking capacity (COC). During designated use, connectors are not allowed to be engaged or disengaged when live or under load • Long term storage of the product with average temperature of 50 °C and maximum humidity 70%, 36 months

SC 3.81/03/90F 3.2SN BK BX

Weidmüller Interface GmbH & Co. KG
Klingenbergstraße 26
D-32758 Detmold
Germany

www.weidmueller.com

Technical data

Approvals

Approvals	
Approvals MAMID	https://mdcop.weidmueller.com/mediadelivery/rendition/900_319230/-T1z1mm-S800/
ROHS	Conform
UL File Number Search	UL Website
Certificate No. (cURus)	E60693

Downloads

Approval/Certificate/Document of Conformity	Declaration of the Manufacturer
Engineering Data	CAD data – STEP
Product Change Notification	Change of packaging - DE Change of packaging - EN
Catalogues	Catalogues in PDF-format
Brochures	FL DRIVES EN MB DEVICE MANUF. EN FL DRIVES DE FL BUILDING SAFETY EN FL APPL LED LIGHTING EN FL INDUSTR.CONTROLS EN FL MACHINE SAFETY EN FL HEATING ELECTR EN FL APPL_INVERTER EN FL_BASE_STATION_EN FL ELEVATOR EN FL POWER SUPPLY EN FL 72H SAMPLE SER EN PO OMNIMATE EN PO OMNIMATE EN

SC 3.81/03/90F 3.2SN BK BX

Weidmüller Interface GmbH & Co. KG
Klingenbergstraße 26
D-32758 Detmold
Germany

www.weidmueller.com

Drawings

Product image

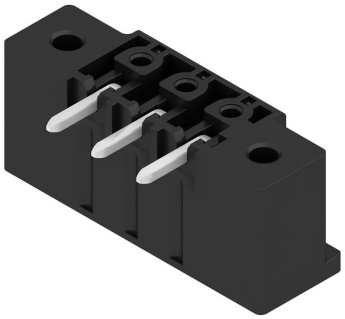

Dimensional drawing

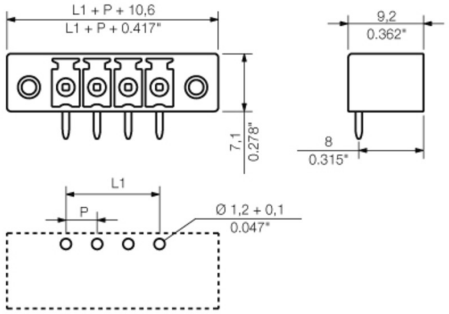

SC 3.81/03/90F 3.2SN BK BX

Weidmüller Interface GmbH & Co. KG
Klingenbergstraße 26
D-32758 Detmold
Germany

www.weidmueller.com

Accessories

LED Light guides

Effective: the link between LED and front panel.
Floodlight indicators allow users to monitor the switching states without requiring a special design: optical plastic directs the light from standard LEDs around a bend into the connectors or through the front plate.
The fibre-optic elements are simply clipped behind the relevant 90° bend male connectors (90° outlet direction).
Versions with different incoming light beam heights achieve maximum light efficiency for LEDs with different designs or heights.
The advantages compared to conventional solutions:

- No additional LED circuit board required behind the front panel
- No "long-legged" LEDs with separate mounting required
- Bent fibre-optic cable line for maximum light efficiency
- Uncomplicated front plate bore holes due to circular shape of outgoing light beam
- Easy to maintain correct clearance and creepage distance
- Can be partitioned for smaller pole numbers

The result: simplified manufacturing process, reduced costs and simplified design

General ordering data

Type	SC 3.81 FLA 2.3/14.25	Version	Product data	Packaging
Order No.	1979750000	PCB plug-in connector, Accessories, Flood-light display, Transparent,		Box
GTIN (EAN)	4032248752478	Number of poles: 8		
Qty.	50 pc(s).			
Type	SC 3.81 FLA 1.5/16	Version	Product data	Packaging
Order No.	1979720000	PCB plug-in connector, Accessories, Flood-light display, Transparent,		Box
GTIN (EAN)	4032248752447	Number of poles: 8		
Qty.	50 pc(s).			
Type	SC 3.81 FLA 1.5/14.25	Version	Product data	Packaging
Order No.	1979730000	PCB plug-in connector, Accessories, Flood-light display, Transparent,		Box
GTIN (EAN)	4032248752454	Number of poles: 8		
Qty.	50 pc(s).			
Type	SC 3.81 FLA 2.3/16	Version	Product data	Packaging
Order No.	1979740000	PCB plug-in connector, Accessories, Flood-light display, Transparent,		Box
GTIN (EAN)	4032248752461	Number of poles: 8		
Qty.	50 pc(s).			

SC 3.81/03/90F 3.2SN BK BX

Weidmüller Interface GmbH & Co. KG
Klingenbergstraße 26
D-32758 Detmold
Germany

www.weidmueller.com

Accessories

Coding elements

Only connects what is supposed to be connected: the right connection at the right place.
Coding elements and locking devices clearly assign connecting elements during the manufacturing process and operation
The coding elements and locking devices are inserted prior to assembly or during the cable assembly phase.
The Weidmüller alternative: configure online using the variant configurator to precode prior to delivery.
Incorrect assembly on the circuit board and incorrect plugging of connecting elements is no longer possible.
The advantage: no troubleshooting during manufacture and no operational errors by the user.

General ordering data

Type	SC-SMT 3.81 KO BK BX	Version	Product data	Packaging
Order No.	2460700000	PCB plug-in connector, Accessories, Coding element, black		Box
GTIN (EAN)	4050118480023			
Qty.	100 pc(s).			
Type	SC-SMT 3.81 KO WT BX	Version	Product data	Packaging
Order No.	2467670000	PCB plug-in connector, Accessories, Coding element, white		Box
GTIN (EAN)	4050118494693			
Qty.	100 pc(s).			

Dimensions without tolerances are no check dimensions

The English version is binding

08

SC 3.81/.../90G 3.2....

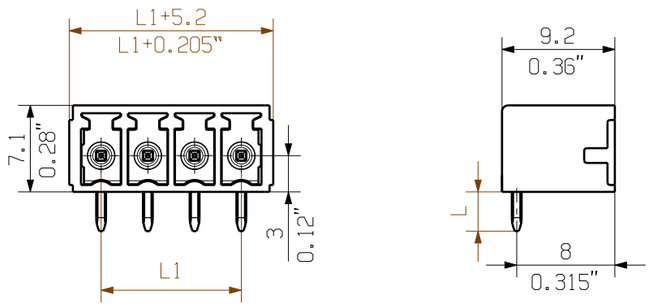

SC 3.81/.../90F 3.2...

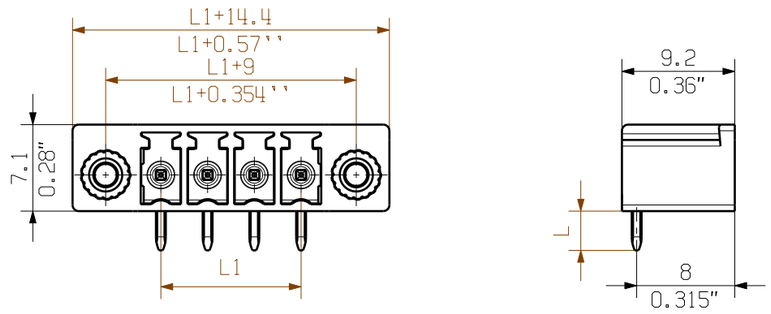

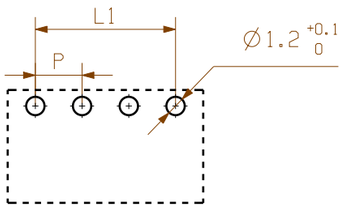

PCB LAYOUT

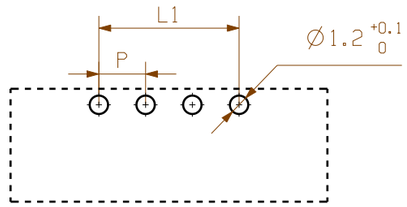

PCB LAYOUT

KUNDENZEICHNUNG
CUSTOMER DRAWING

P=3.81

N	L1 [mm]	L1 [inch]
20	72.39	2.850
19	68.58	2.700
18	64.77	2.550
17	60.96	2.400
16	57.15	2.250
15	53.34	2.100
14	49.53	1.950
13	45.72	1.800
12	41.91	1.650
11	38.10	1.500
10	34.29	1.350
9	30.48	1.200
8	26.67	1.050
7	22.86	0.900
6	19.05	0.750
5	15.24	0.600
4	11.43	0.450
3	7.62	0.300
2	3.81	0.150

For the mounting of PCBs, it should be noted that the rated data given in the catalogue relates only to the connection elements. The neccessary creepage and clearance paths must be observed in connection with the respective applicant in accordance to VDE 0110. The current-carrying capacity and pitch tolerance is to be determined according to DIN IEC 326 part 3 very fine.

Weidmüller connectors are tested to the DIN VDE 0627 standard, and are valid for its field of application. Provided that the connectors are used to the intended purpose, all requirements with respect to the occuring of electrical, mechanical, thermic and corrosive stress will be satisfied.

GENERAL TOLERANCE:
DIN ISO 2768-m

RoHS COMPLIANT

Max. nos.

97482/0
06.09.17 MA_J
.
01

Modification

. .

Cat.no.: .

Weidmüller

C 40384 08

Drawing no. Issue no.

Sheet 01 of 02 sheets

	Date	Name
Drawn	09.02.2006	ZHANG_H
Responsible		MA_J
Checked	13.09.2017	ZHOU_N
Approved		XU_S

Scale: 5/1

Supersedes: .

SC 3.81/.../90...3.2...

ANSCHLUSS STIFTLEISTE
PIN HEADER

Product file: SC 3.81 7069

The reproduction, distribution and utilization of this document as well as the communication of its contents to others without explicit authorization is prohibited.
Offenders will be held liable for the payment of damages. Weidmueller exclusively reserves the right to file for patents, utility models or designs.
© Weidmueller Interface GmbH & Co. KG

Recommended wave solderding profiles

Weidmüller Interface GmbH & Co. KG
Klingenbergstraße 16
D-32758 Detmold
Germany
Fon: +49 5231 14-0
Fax: +49 5231 14-292083
www.weidmueller.com

Single Wave:

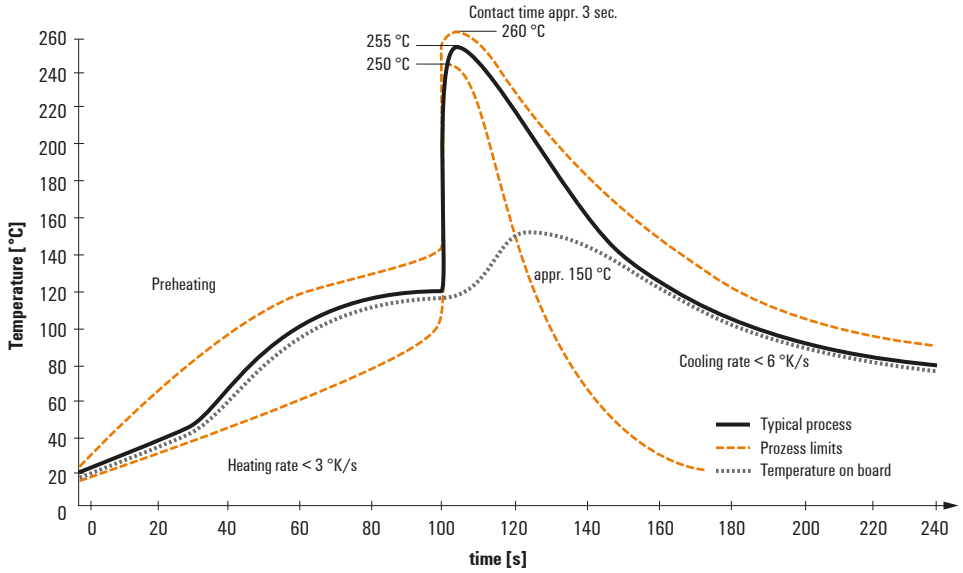

Double Wave:

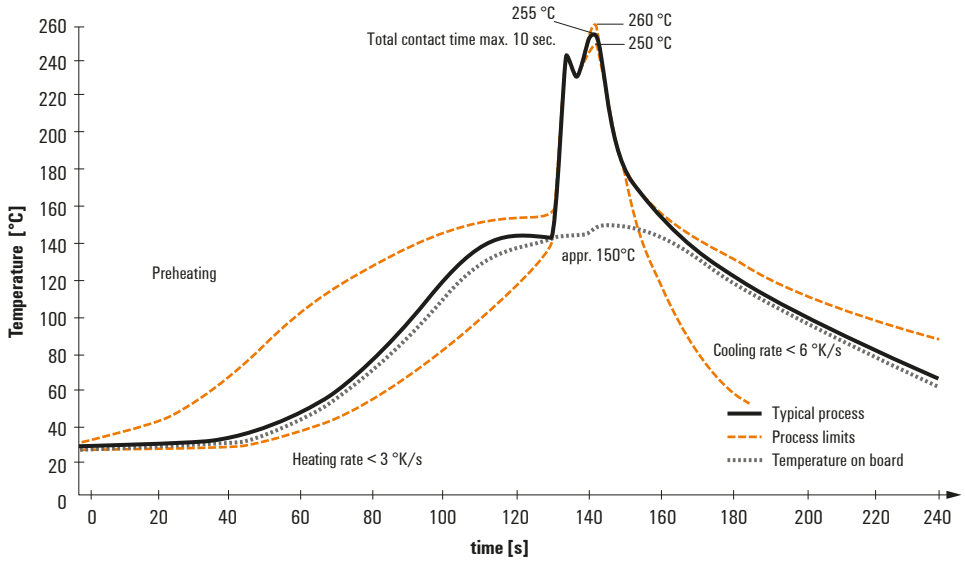

Wave soldering profiles

Wired connection elements should be processed in accordance with the DIN EN 61760-1 standard. We have included two recommendations for practical wave soldering profiles, with which Weidmüller PCB terminals and connectors are qualified.

When choosing a suitable profile for your application, the following factors also need to be considered:
- PCB thickness
- Proportion of Cu in the layers
- Single/double-sided assembly
- Product range
- Heating and cooling rates

The single and double wave profiles each indicate the recommended operating range, including the maximum soldering temperature of 260°C. In practice, the maximum soldering temperature is quite often well below the above maximum profile.

We reserve the right to make technical changes.