SAID-M8S-3S-THR

Weidmüller Interface GmbH & Co. KG
Klingenbergstraße 26
D-32758 Detmold
Germany

www.weidmueller.com

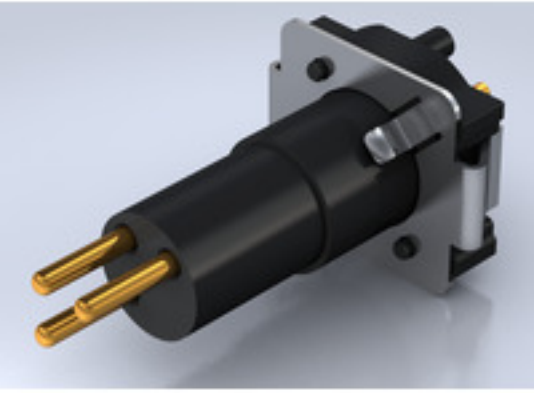

Weidmüller is one of the industry's leading international providers of connectors. An important mainstay in this product family are the circular connectors, which Weidmüller groups under the product name SAI. In the development of SAI products, Weidmüller engineers have always concentrated on achieving rational, cost-effective installation concepts, and – in cooperation with major users – have supplied the markets with well-conceived products which set standards in terms of functionality and quality across the globe. The best examples are the new power distributors with S and T coded M12. These modules are characterised by particularly high currents and voltages. This enables them to also be used, for example, with three-phase motors.

General ordering data

Version	Built-in plugs, M8, Mounting thread: , Number of poles: 3, Strand / cable length:
Order No.	2423850000
Type	SAID-M8S-3S-THR
GTIN (EAN)	4050118430295
Qty.	25 pc(s).

SAID-M8S-3S-THR

Weidmüller Interface GmbH & Co. KG
Klingenbergstraße 26
D-32758 Detmold
Germany

www.weidmueller.com

Technical data

Dimensions and weights

Net weight	2.92 g

Technical data of PCB plug-in connector

Coding	M8 = none	Housings	M8 pin
Number of poles	3	Shield connection	No
Rated voltage	60 V	Rated voltage	60 V (3-pole) / 30 V (4-,5- and 8-pole)
Rated current	4 A	Rated current	4 A (3-, 4- and 5-pole) / 1.5 A (8-pole)
Temperature range	-25...95 °C	Protection degree	IP67
Contact surface	Au (Gold)	Housing main material	LCP
Connection thread	M8	Tightening torque	M8: 0.5 Nm
Pollution severity	3 (2 within the sealed area)	Plugging cycles	≥ 100
Contact material	Cu-alloy	Lock nut material	Nickel-plated CuZn
Material of the flange-mounted housing	Nickel-plated CuZn		

General Info

Number of poles	3	UL 94 flammability rating	V-0
Housing main material	LCP	Connection thread	M8
Contact material	Cu-alloy	Contact surface	Au (Gold)
Protection degree	IP67	Plugging cycles	≥ 100

Material data

UL 94 flammability rating	V-0	Contact material	Cu-alloy
Contact surface	Au (Gold)		

System parameters

Number of poles	3	Pin series quantity	1
Plugging cycles	≥ 100	Protection degree	IP67

Classifications

ETIM 6.0	EC000438	ETIM 7.0	EC003557
ETIM 8.0	EC003557	ETIM 9.0	EC003557
ETIM 10.0	EC003557	ECLASS 9.1	27-44-02-05
ECLASS 10.0	27-44-02-23	ECLASS 11.0	27-44-02-23
ECLASS 12.0	27-44-02-23	ECLASS 13.0	27-44-02-23
ECLASS 14.0	27-44-02-23	ECLASS 15.0	27-44-02-23

Environmental Product Compliance

RoHS Compliance Status	Compliant with exemption
RoHS Exemption (if applicable/known)	6c
REACH SVHC	Lead 7439-92-1
SCIP	0ea6d931-f9e9-40a6-89d9-8d67103189d3

Approvals

ROHS	Conform

SAID-M8S-3S-THR

Weidmüller Interface GmbH & Co. KG
Klingenbergstraße 26
D-32758 Detmold
Germany

www.weidmueller.com

Technical data

Downloads

Engineering Data	CAD data – STEP
Catalogues	Catalogues in PDF-format
Brochures	FL FIELDWIRING EN

SAID-M8S-3S-THR

Weidmüller Interface GmbH & Co. KG
Klingenbergstraße 26
D-32758 Detmold
Germany

www.weidmueller.com

Drawings

Dimensioned drawing

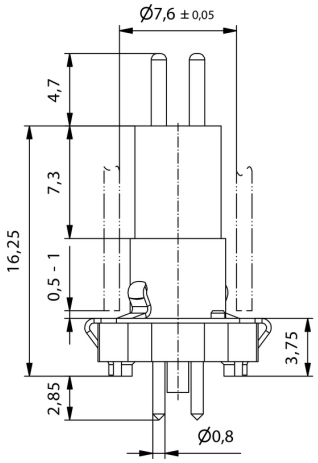

PCB design

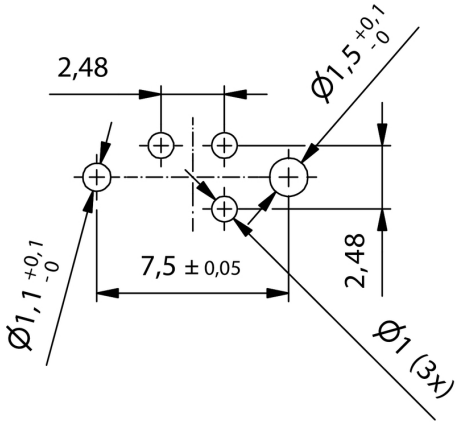
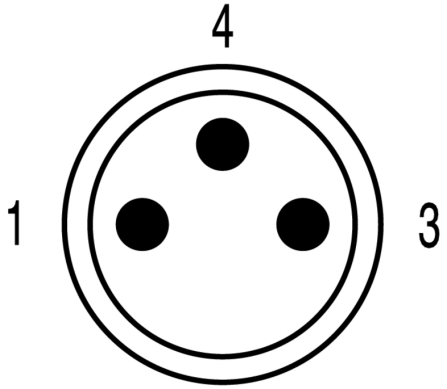
Pole scheme