Current transformers

Measurement sensors

5 to 5000 A

Three-phase CT

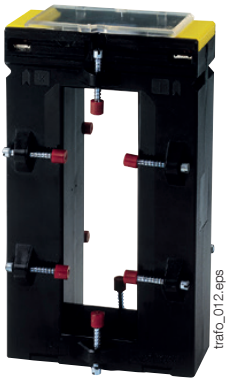

Bar-through CT

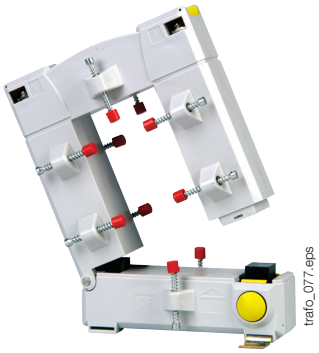

Split-core CT

Cable-through CT

Function

SOCOMEC **current transformers** deliver a standard secondary current that is proportional to the primary current and suitable for the rating of the associated energy meter. They are equipped as standard with removable terminal covers and double terminals allowing the secondary to be short-circuited without any risk.
They are mounted using two screw-on metal feet or, in certain cases, by a clip-on DIN rail fastener. The connections are made by screws or by Fast-on terminals.

- Accuracy class: 0.2s — 0.5 or 1.
- Dielectric quality: 3 kV — 50 Hz — 1 min.
- Operating frequency: 50 — 60 Hz.
- Permanent overload: 1.2 In.
- Insulation class: E (120 °C).

Advantages

A suitable accuracy class

- In order to get the best of your DIRIS PMDs and COUNTIS energy meters, we can provide current transformers with the following accuracy classes: 0.2s; 0.5; 1 or 3.

Wide selection of ratings and sizes

- Your measurement process can be optimised whatever your needs in terms of ratings, space requirements, conductor sizing or accuracy class. All combinations are available as standard or on request.

Quick and easy installation

- Our current transformers are suitable for any type of mounting: edgewise or flat mounting, DIN-rail or backplate mounting. Implementation is quick and easy.

The solution for

> Industry
> Service sector

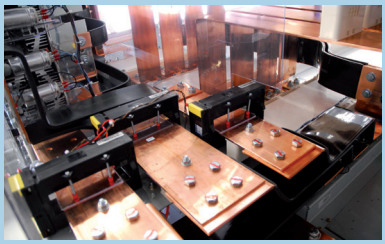

Strong points

> A suitable accuracy class
> Wide selection of ratings and sizes
> Quick and easy installation

Conformity to standards

> IEC 61869-2
> IEC 61439-1

Other products

SOCOMEC also offers customised solutions:

> 1 A secondary
> Double or triple primary ratio
> Voltage transformer
> Summation CTs

socomec Innovative Power Solutions

Specifications

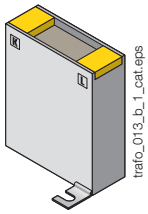

Wound primary CT

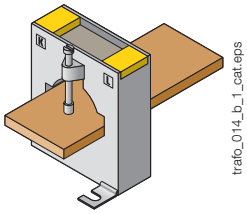

Bar- or cable-through CT

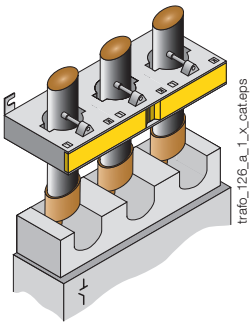

Three-phase bar- or cable-through CT

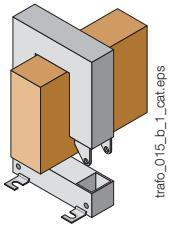

Split-core bar-through CT

Wound primary CT

References

		TRB 60		TRB 70		T2RB 115		TRB 135	
Primary	**Secondary** [1]	**Class 0.5**	**Reference**	**Class 0.5**	**Reference**	**Class 0.2s**	**Reference**	**Class 0.5**	**Reference**
5 A	5 A	2.5 VA	192T **0505**	10 VA	192T **0521**	-	-	-	-
10 A	5 A	2.5 VA	192T **0510**	10 VA	192T **0522**				
15 A	5 A	-	-	10 VA	192T **0523**	-	-	-	-
20 A	5 A	-	-	10 VA	192T **0524**				
25 A	5 A	-	-	10 VA	192T **0525**	7.5 VA	192U **0402**	-	-
30 A	5 A	-	-	5 VA	192T **0530**	-	-	-	-
40 A	5 A	-	-	5 VA	192T **0541**	7.5 VA	192U **0404**	10 VA	192T **0604**
50 A	5 A	-	-	5 VA	192T **0551**	7.5 VA	192U **0405**	10 VA	192T **0605**
60 A	5 A	-	-	-	-	7.5 VA	192U **0406**	10 VA	192T **0606**
75 A	5 A	-	-	-	-	7.5 VA	192U **0407**	10 VA	192T **0608**
80 A	5 A	-	-	-	-	7.5 VA	192U **0408**	10 VA	192T **0609**
100 A	5 A	-	-	-	-	-	-	-	-
125 A	5 A	-	-	-	-	7.5 VA	192U **0412**	10 VA	192T **0612**
150 A	5 A	-	-	-	-	7.5 VA	192U **0415**	10 VA	192T **0615**

(1) 1 A secondary: on request.

	TRB 60	TRB 70	T2RB 115	TRB 135
Accessories	**Reference**	**Reference**	**Reference**	**Reference**
Replacement DIN-rail mounting	192T **0003**	192T **0005** [1]	-	-
Sealable cover	192T **0105**	192T **0103**	-	192T **0101** [2]

(1) For 40 and 50 A ratings, use reference 192T 0008.
(2) For 125 and 150 A ratings, use reference 192T 0103.

CT Plug-in transducer (CEA-VA)

		TRB 60	TRB 70
Power supply	**Output**	**Reference**	**Reference**
Self-powered	0-20 mA / 0-10 VDC	192Y **0015**	192Y **0025** [1]
230 VAC	0-20 mA / 0-10 VDC	192Y **0215**	192Y **0225** [1]
24 VDC	0-20 mA / 0-10 VDC	192Y **0115**	192Y **0125** [1]

(1) Not available for 40 and 50 A ratings.

CT Plug-in transducer (CEA-VA4)

		TRB 60	TRB 70
Power supply	**Output**	**Reference**	**Reference**
230 VAC	4-20 mA / 0-10 VDC	192Y **0255**	192Y **0265** [1]
24 VDC	4-20 mA / 0-10 VDC	192Y **0155**	192Y **0165** [1]

(1) Not available for 40 and 50 A ratings.

Certificate of performance

Each class 0.2s current transformer is supplied with an individual certificate of performance, attesting to its accuracy.

Wound primary CT (cntd)

Accessories

TRB 60

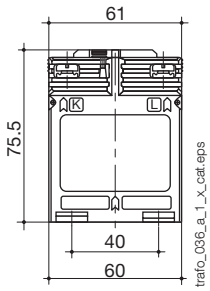

TRB 70[1]

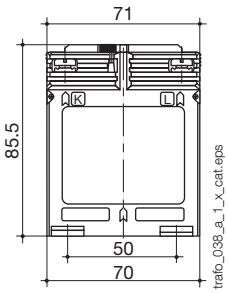

(1) 40 A and 50 A ratings, different dimensions

TRB 70 (for 40 and 50 A ratings)

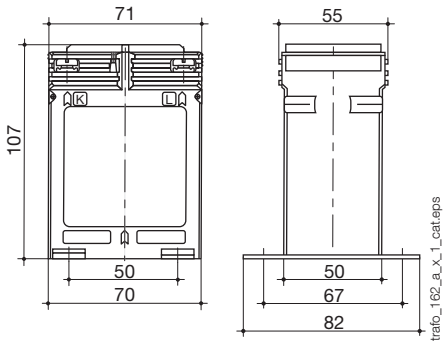

T2RB115

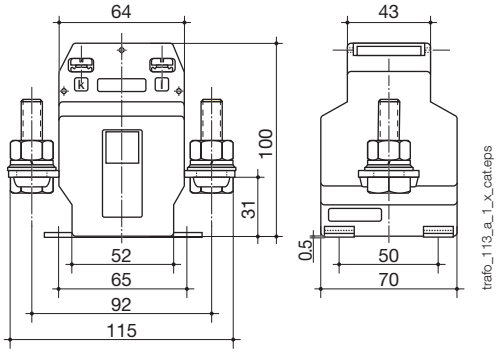

TRB 135

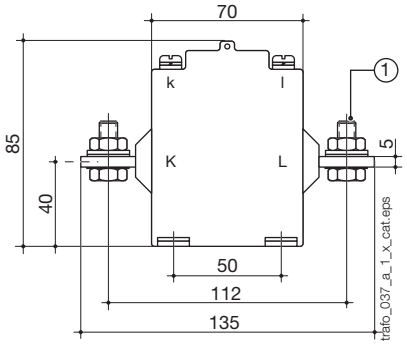

(1) 25 to 100 A: M8 x 25

TRB 135 (for 125 and 150 A ratings)

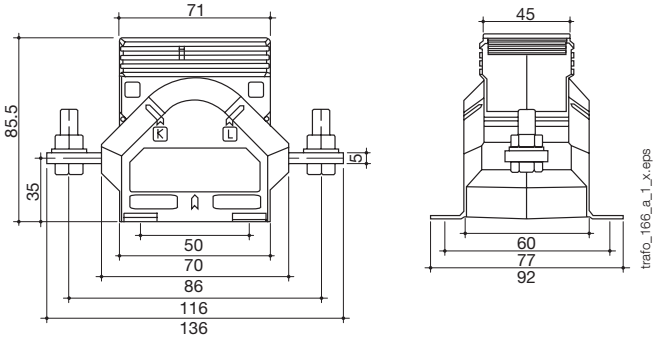

Wound primary CT	TRB 60	TRB 70 [1]	T2RB 115	TRB 135 [2]
H x W x D (mm)	75.5 x 61 x 35	85.5 x 71 x 45	115 x 100 x 70	85 x 135 x 60
DIN-rail mounting	Yes	Yes	No	No

(1) TRB 70 with 40 A and 50 A rating, different dimensions.
(2) TRB 135 with 125 A and 150 A rating, different dimensions.

Matching transducers

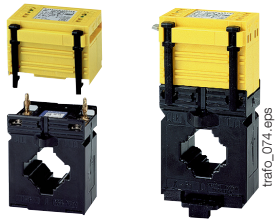

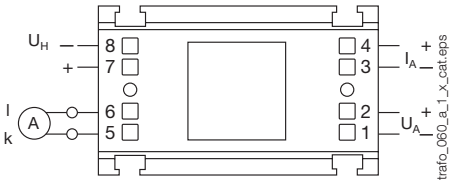

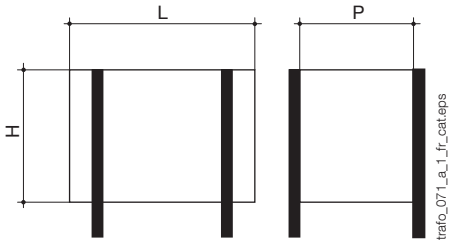

Measurement converter, snap-on for some current transformers.

- Class 0.5.
- Input: 1 or 5 A.
- Output:
  - 0-20 mA, 0-10 V (model CTA-VA)
  - 4-20 mA, 0-10 V (model CTA-VA4).
- Self-powered or auxiliary power supply 24 VDC or 230 VAC.
- 3 sizes depending on transformers: type 1, type 2 or type 3.

Dimensions (mm)				
Converters	For CT	Height (mm)	Width (mm)	Depth (mm)
Type 1	TRB 60	50.5	60	32.5
Type 2	TRB 70	50	70	43

Cable-through CT

References

		TCA 14		TCA 21			TCA 22		T2CA 225	
Primary	**Secondary** [1]	**Class 1**	**Reference**	**Class 1**	**Class 0.5**	**Reference**	**Class 1**	**Reference**	**Class 0.2s**	**Reference**
40 A	5 A	1	192T **1404**							
50 A	5 A	1	192T **1405**							
60 A	5 A	1.5	192T **1406**	1 VA		192T **2006**				
75 A	5 A	1.5	192T **1407**	1.5 VA		192T **2007**				
80 A	5 A			1.5 VA		192T **2008**				
100 A	5 A	2.5	192T **1410**		1.5 VA	192T **2010**	1 VA	192T **2022**		
125 A	5 A	2.5	192T **1412**		1.5 VA	192T **2012**				
150 A	5 A	2.5	192T **1415**		1.5 VA	192T **2015**	1.5 VA	192T **2023**	1.5 VA	192U **2215**
200 A	5 A				2.5 VA	192T **2020**	2.5 VA	192T **2024**	2.5 VA	192U **2220**
250 A	5 A				2.5 VA	192T **2016**	3.75 VA	192T **2025**	5 VA	192U **2225**
300 A	5 A				2.5 VA	192T **2017**	3.75 VA	192T **2030**	5 VA	192U **2230**
400 A	5 A						5 VA	192T **2034**	5 VA	192U **2240**
500 A	5 A						5 VA	192T **2035** [2]	10 VA	192U **2250**
600 A	5 A						5 VA	192T **2036** [2]	10 VA	192U **2260**

(1) 1 A secondary: on request.
(2) Dimensions of T2CA 225

Accessories

	TCA 14	TCA 21	TCA 22	T2CA 225
Accessories	**Reference**	**Reference**	**Reference**	**Reference**
Replacement DIN-rail mount except for TCA14	192T **0006**	192T **0006**	192T **0007**	192T **0003**
Guide tube Ø 8.5 mm [1]		192T **0020**		
Guide tube Ø 12.5 mm [1]		192T **0021**	192T **0023**	
Guide tube Ø 16.5 mm [1]			192T **0024**	
Sealable cover				192T **0105**

(1) For centralising cables within the CT aperture.

Dimensions

TCA 14

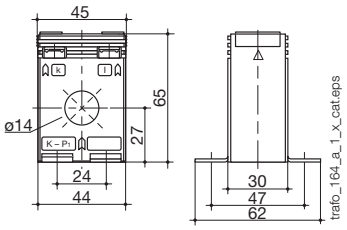

TCA 21

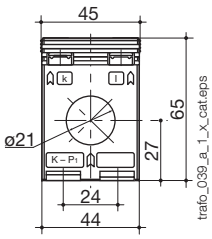

TCA 22

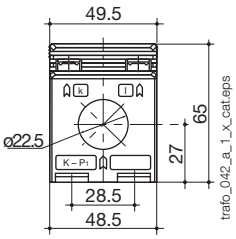

T2CA 225

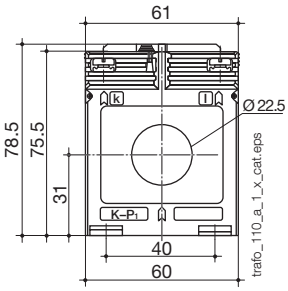

Cable-through CT	TCA 14	TCA 21	TCA 22[1]	T2CA 225
Cable Ø (mm)	14	21	22.5	22.5
H x W x D (mm)	65 x 45 x 30	65 x 45 x 30	65 x 49.5 x 35	78.5 x 61 x 35
DIN-rail mounting	Yes	Yes	Yes	Yes

(1) Different dimensions for 600 A rating: 78.5x61x35.

Bar- or cable-through CT

References

		TCB 17-20		TCB 26-30			T2CB 26-30		TCB 28-30		
Primary	**Secondary** [1]	**Class 1**	**Reference**	**Class 0.5**	**Class 1**	**Reference**	**Class 0.2S**	**Reference**	**Class 0.5**	**Class 1**	**Reference**
50 A	5 A				1 VA	192T **2305**					
60 A	5 A	1 VA	192T **2106**		1 VA	192T **2306**					
75 A	5 A	1 VA	192T **2107**		1.5 VA	192T **2307**					
80 A	5 A	1.25 VA	192T **2108**		1.5 VA	192T **2308**				1.25 VA	192T **2408**
100 A	5 A	1.5 VA	192T **2110**	1.5 VA		192T **2310**					
125 A	5 A	1.5 VA	192T **2112**	1.5 VA		192T **2312**				2.5 VA	192T **2412**
150 A	5 A			1.5 VA		192T **2315**	1.5 VA	192U **2315**		2.5 VA	192T **2415**
160 A	5 A	2.5 VA	192T **2116**								
200 A	5 A	2.5 VA	192T **2120**	2.5 VA		192T **2320**	2.5 VA	192U **2320**	2.5 VA		192T **2420**
250 A	5 A			5 VA		192T **2325**	2.5 VA	192U **2325**	2.5 VA		192T **2425**
300 A	5 A	5 VA	192T **2130**				5 VA	192U **2330**	2.5 VA		192T **2430**
400 A	5 A	5 VA	192T **2140**	5 VA		192T **2340**	5 VA	192U **2340**	5 VA		192T **2440**
500 A	5 A			5 VA		192T **2350**	5 VA	192U **2350**	5 VA		192T **2450**
600 A	5 A			5 VA		192T **2360**	5 VA	192U **2360**			
750 A	5 A			5 VA		192T **2375**	5 VA	192U **2375**			

(1) 1 A secondary: on request.

		TCB 26-40		TCB 32-40			T2CB 32-40	
Primary	**Secondary** [1]	**Class 1**	**Reference**	**Class 0.5**	**Class 1**	**Reference**	**Class 0.2S**	**Reference**
75 A	5 A				1.5 VA	192T **4007**		
100 A	5 A	1.5 VA	192T **3210**	1.5 VA		192T **4010**		
125 A	5 A	2.5 VA	192T **3212**	1.5 VA		192T **4012**		
150 A	5 A	2.5 VA	192T **3215**	2.5 VA		192T **4015**		
160 A	5 A	2.5 VA	192T **3216**					
200 A	5 A	2.5 VA	192T **3220**	5 VA		192T **4020**	2.5 VA	192U **4020**
250 A	5 A	2.5 VA	192T **3225**	5 VA		192T **4025**	5 VA	192U **4025**
300 A	5 A	5 VA	192T **3230**	10 VA		192T **4030**	5 VA	192U **4030**
400 A	5 A	5 VA	192T **3240**	10 VA		192T **4040**	5 VA	192U **4040**
500 A	5 A	5 VA	192T **3250**				5 VA	192U **4050**
600 A	5 A	5 VA	192T **3260**	10 VA		192T **4060**	5 VA	192U **4060**
750 A	5 A	10 VA	192T **3275**	10 VA		192T **4075**	5 VA	192U **4075**
800 A	5 A			10 VA		192T **4080**		
1000 A	5 A			10 VA		192T **4090**		

(1) 1 A secondary: on request.

Accessories

	TCB 17-20	TCB 26-30	TCB 26-40	TCB 32-40
Accessories	**Reference**	**Reference**	**Reference**	**Reference**
Replacement DIN-rail mounting	192T **0007**	192T **0003**	192T **0003**	192T **0005**
Sealable cover		192T **0105**	192T **0105**	192T **0103**

CT Plug-in transducer (CEA-VA)

		TCB 26-30	TCB 26-40	TCB 32-40
Power supply	**Output**	**Reference**	**Reference**	**Reference**
Self-powered	0-20 mA / 0-10 VDC	192Y **0015**	192Y **0015**	192Y **0035**
230 VAC	0-20 mA / 0-10 VDC	192Y **0215**	192Y **0215**	192Y **0235**
24 VDC	0-20 mA / 0-10 VDC	192Y **0115**	192Y **0115**	192Y **0135**

CT Plug-in transducer (CEA-VA4)

		TCB 26-30	TCB 26-40	TCB 32-40
Power supply	**Output**	**Reference**	**Reference**	**Reference**
230 VAC	4-20 mA / 0-10 VDC	192Y **0255**	192Y **0255**	192Y **0275**
24 VDC	4-20 mA / 0-10 VDC	192Y **0155**	192Y **0155**	192Y **0175**

References

		TCB 44-50		TCB 44-63		T2CB 44-63	
Primary	**Secondary (1)**	**Class 0.5**	**Reference**	**Class 0.5**	**Reference**	**Class 0.2S**	**Reference**
150 A	5 A	1.5 VA	192T **5015**				
200 A	5 A	2.5 VA	192T **5020**	1.5 VA	192T **6420**		
250 A	5 A	5 VA	192T **5025**	1.5 VA	192T **6425**		
300 A	5 A	5 VA	192T **5030**	2.5 VA	192T **6430**	5 VA	192U **6430**
400 A	5 A	10 VA	192T **5040**	5 VA	192T **6440**	5 VA	192U **6440**
500 A	5 A	10 VA	192T **5050**	10 VA	192T **6450**	10 VA	192U **6450**
600 A	5 A	10 VA	192T **5060**	10 VA	192T **6460**	10 VA	192U **6460**
750 A	5 A	10 VA	192T **5075**	10 VA	192T **6475**	10 VA	192U **6475**
800 A	5 A	15 VA	192T **5080**	10 VA	192T **6480**		
1000 A	5 A	15 VA	192T **5090**			10 VA	192U **6490**
1200 A	5 A	15 VA	192T **5092**	15 VA	192T **6492**	10 VA	192U **6492**
1250 A	5 A	15 VA	192T **5095**	15 VA	192T **6493**	10 VA	192U **6493**
1500 A	5 A			15 VA	192T **6495**	10 VA	192U **6495**
1600 A	5 A			15 VA	192T **6494**		

(1) 1 A secondary: on request.

		TCB 55-80		TCB 85-100		TCB 100-125	
Primary	**Secondary (1)**	**Class 0.5**	**Reference**	**Class 0.5**	**Reference**	**Class 0.5**	**Reference**
400 A	5 A	2.5 VA	192T **8140**				
500 A	5 A	5 VA	192T **8150**				
600 A	5 A	5 VA	192T **8160**				
750 A	5 A	10 VA	192T **8175**	2.5 VA	192T **9675**		
800 A	5 A	10 VA	192T **8180**	5 VA	192T **9680**		
1000 A	5 A	15 VA	192T **8190**	10 VA	192T **9690**	5 VA	192T **9590**
1200 A	5 A	15 VA	192T **8192**	10 VA	192T **9692**		
1250 A	5 A	15 VA	192T **8193**	15 VA	192T **9693**	10 VA	192T **9593**
1500 A	5 A	15 VA	192T **8195**	15 VA	192T **9695**	15 VA	192T **9595**
1600 A	5 A	15 VA	192T **8194**	15 VA	192T **9694**		
2000 A	5 A	15 VA	192T **8196**			30 VA	192T **9596**
2500 A	5 A			30 VA	192T **9697**	30 VA	192T **9597**
3000 A	5 A			30 VA	192T **9698**	30 VA	192T **9598**

(1) 1 A secondary: on request.

Accessories

	TCB 44-50	TCB 44-63	TCB 55-80	TCB 85-100	TCB 100-125
Accessories	**Reference**	**Reference**	**Reference**	**Reference**	**Reference**
Sealable cover	192T **0102**	192T **0102**	192T **0102**	192T **0106**	192T **0106**

CT Plug-in transducer (CEA-VA)

		TCB 44-50	TCB 44-63	TCB 55-80
Power supply	**Output**	**Reference**	**Reference**	**Reference**
Self-powered	0-20 mA / 0-10 VDC		192Y **0045**	192Y **0045**
230 VAC	0-20 mA / 0-10 VDC		192Y **0245**	192Y **0245**
24 VDC	0-20 mA / 0-10 VDC		192Y **0145**	192Y **0145**

CT Plug-in transducer (CEA-VA4)

		TCB 44-50	TCB 44-63	TCB 55-80
Input	**Output**	**Reference**	**Reference**	**Reference**
230 VAC	4-20 mA / 0-10 VDC		192Y **0285**	192Y **0285**
24 VDC	4-20 mA / 0-10 VDC		192Y **0185**	192Y **0185**

Bar- or cable-through CT (cntd)

Dimensions

TCB 17-20

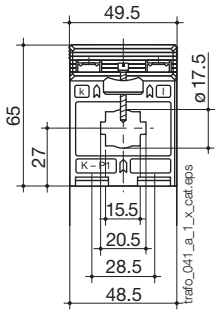

TCB 26-30 and T2CB 26-30

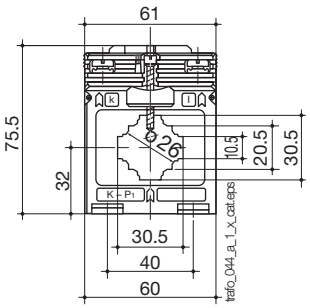

TCB 28-30

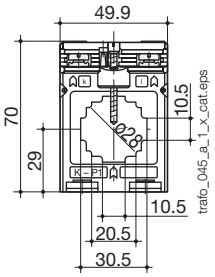

TCB 26-40

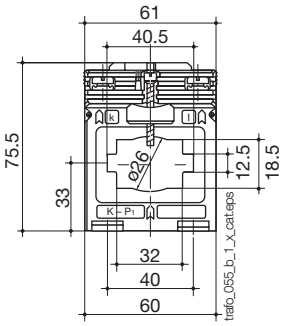

TCB 32-40 and T2CB 32-40

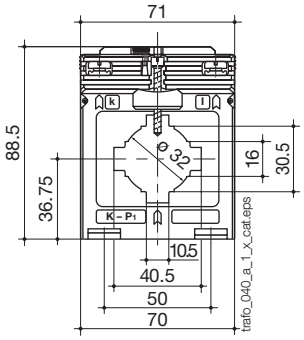

TCB 44-50

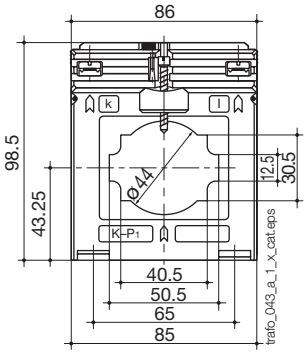

TCB 44-63 and T2CB 44-63

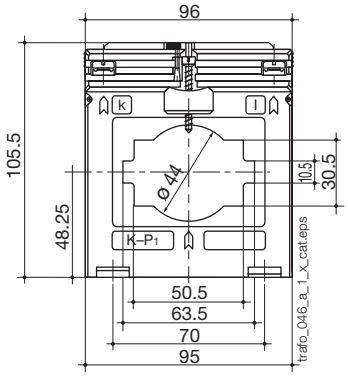

TCB 55-80

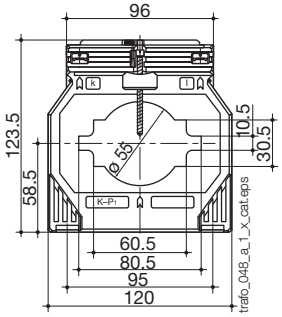

TCB 85-100

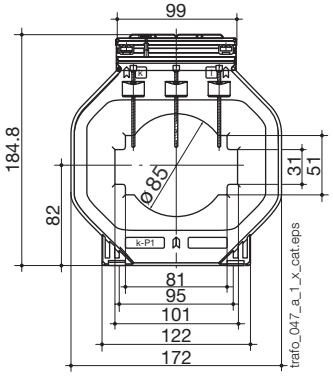

TCB 100-125

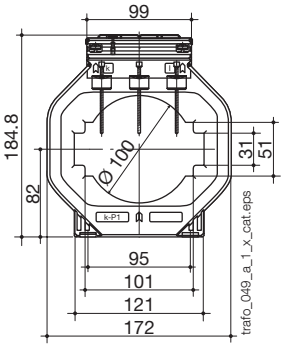

Bar- or cable-through CT	TCB 17-20	TCB 26-30	T2CB 26-30	TCB 26-40	TCB 28-30	TCB 32-40	T2CB 32-40
Accepts bar (mm)	20 x 5 (x 1)	30 x 10 (x 1)/ 20 x 10 (x 1… 2)	30 x 10 (x 1)/ 20 x 10 (x 1… 2)	40 x 12 (x 1)/ 32 x 18 (x 1)	30 x 10 (x 1)	40 x 10 (x 1)/ 30 x 5 (x 1… 2)	40 x 10 (x 1)/ 30 x 5 (x 1… 2)
Cable Ø (mm)	17.5	26	26	26	28	32	32
H x W x D (mm)	65 x 49.5 x 50	75.5 x 61 x 48	75.5 x 61 x 48	75.5 x 61 x 48	70 x 49.9 x 68	88.5 x 71 x 58	88.5 x 71 x 58
DIN-rail mounting	Yes	Yes	Yes	Yes		Yes	Yes

Bar- or cable-through CT	TCB 44-50	TCB 44-63	T2CB 44-63	TCB 55-80	TCB 85-100	TCB 100-125
Accepts bar (mm)	50 x 12 (x 1)/ 40 x 10 (x 1… 2)	63 x 10 (x 1)/ 50 x 10 (x 1… 2)	63 x 10 (x 1)/ 50 x 10 (x 1… 2)	80 x 10 (x 1)/ 60 x 30 (x 1)/ 60 x 10 (x 1… 2)	100 x 10 (x 1… 2)/ 80 x 10 (x 1… 3)	123 x 30 (x 1)/ 100 x 10 (x 1… 3)
Cable Ø (mm)	44	44	44	55	85	100
H x W x D (mm)	98.5 x 86 x 58	105.5 x 96 x 58	105.5 x 96 x 58	123.5 x 120 x 58	184.5 x 172 x 52	184.5 x 172 x 52

Matching transducers

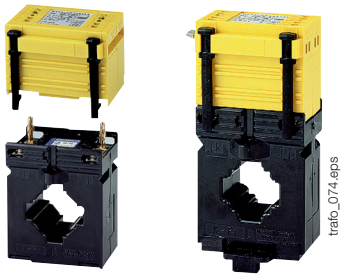

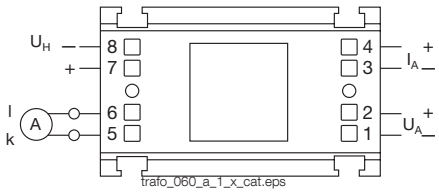

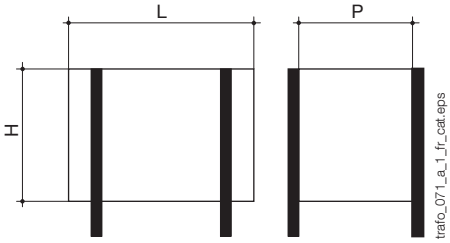

Measurement converter, snap-on for some current transformers

- Class 0.5.
- Input: 1 or 5 A
- Output:
  - 0-20 mA, 0-10 V (CEA-VA model)
  - 4-20 mA, 0-10 V (CEA-VA4 model)
- Self-powered or auxiliary power supply 24 VDC or 230 VAC
- 3 sizes depending on transformers: type 1, type 2 or type 3.

Dimensions (mm)				
Converters	**For CT**	**Height (mm)**	**Width (mm)**	**Depth (mm)**
Type 1	TCB 26-30	50.5	60	32.5
Type 1	TCB 26-40	50.5	60	32.5
Type 2	TCB 32-40	50	70	43
Type 3	TCB 44-63	50.5	95	43
Type 3	TCB 55-80	50.5	95	43

Bar-through CT

References

		TBA 60			TBA 80		TBA 100		T2BA 100	
Primary	**Secondary**	**Class 0.5**	**Class 1**	**Reference**	**Class 0.5**	**Reference**	**Class 0.5**	**Reference**	**Class 0.2s**	**Reference**
200 A	5 A		2.5 VA	192T 7020						
250 A	5 A	2.5 VA		192T 7025						
300 A	5 A	2.5 VA		192T 7030	2.5 VA	192T **7530**				
400 A	5 A	5 VA		192T 7040	5 VA	192T **7540**				
500 A	5 A	5 VA		192T 7050	5 VA	192T **7550**				
600 A	5 A	10 VA		192T 7060	5 VA	192T **7560**	5 VA	192T **8060**		
750 A	5 A	10 VA		192T 7075	5 VA	192T **7575**	5 VA	192T **8075**		
800 A	5 A	10 VA		192T 7080	10 VA	192T **7580**	5 VA	192T **8080**		
1000 A	5 A	15 VA		192T 7090	15 VA	192T **7590**	5 VA	192T **8090**		
1200 A	5 A	15 VA		192T 7092	15 VA	192T **7592**	10 VA	192T **8092**	5 VA	192U **8092**
1250 A	5 A	15 VA		192T 7093	15 VA	192T **7593**	10 VA	192T **8093**	5 VA	192U **8093**
1500 A	5 A	15 VA		192T 7095	15 VA	192T **7595**	15 VA	192T **8095**	5 VA	192U **8095**
1600 A	5 A	15 VA		192T 7094	15 VA	192T **7594**	15 VA	192T **8094**		
2000 A	5 A				15 VA	192T **7596**	15 VA	192T **8096**	5 VA	192U **8096**
2500 A	5 A						30 VA	192T **8097**	10 VA	192U **8097**
3000 A	5 A						15 VA	192T **8098** (1)	10 VA	192U **8098**
4000 A	5 A						30 VA	-		

(1) For TBA 100, 3000 and 4000 A the dimensions are different.

		TBA 103		T2BA 103		TBA 127		T2BA 127	
Primary	**Secondary**	**Class 0.5**	**Reference**	**Class 0.2s**	**Reference**	**Class 0.5**	**Reference**	**Class 0.2s**	**Reference**
400 A	5 A	2.5 VA	192T **9340**						
500 A	5 A	2.5 VA	192T **9350**						
600 A	5 A	2.5 VA	192T **9360**						
750 A	5 A	2.5 VA	192T **9375**						
800 A	5 A	5 VA	192T **9380**			5 VA	192T **9780**		
1000 A	5 A	10 VA	192T **9390**	5 VA	192U **9390**	10 VA	192T **9790**		
1200 A	5 A	10 VA	192T **9392**	5 VA	192U **9392**	10 VA	192T **9792**		
1250 A	5 A	10 VA	192T **9393**	5 VA	192U **9393**	10 VA	192T **9793**		
1500 A	5 A	15 VA	192T **9395**	5 VA	192U **9395**	15 VA	192T **9795**		
1600 A	5 A	10 VA	192T **9394**			15 VA	192T **9794**		
2000 A	5 A	15 VA	192T **9396**			15 VA	192T **9796**	5 VA	192U **9796**
2500 A	5 A					15 VA	192T **9797**		
3000 A	5 A					25 VA	182T **9798** (1)		
4000 A	5 A					30 VA	182T **9799** (1)		

(1) Replacement model TRA 127 for this rating.

Accessories

	TBA 60	TBA 80	TBA 100	T2BA 100	TBA 103	T2BA 103	TBA 127	T2BA 127
Accessories	**Reference**	**Reference**	**Reference**	**Reference**	**Reference**	**Reference**	**Reference**	**Reference**
Sealable cover	192T **0102**		192T **0102**	192T **0102**			192T **0102**	192T **0102**

CT Plug-in transducer (CEA-VA)

		TBA 100
Power supply	**Output**	**Reference**
Self-powered	0-20 mA / 0-10 VDC	192Y **0045**
230 VAC	0-20 mA / 0-10 VDC	192Y **0245**
24 VDC	0-20 mA / 0-10 VDC	192Y **0145**

CT Plug-in transducer (CEA-VA4)

		TBA 100
Power supply	**Output**	**Reference**
230 VAC	4-20 mA / 0-10 VDC	192Y **0285**
24 VDC	4-20 mA / 0-10 VDC	192Y **0185**

Dimensions

TBA 60

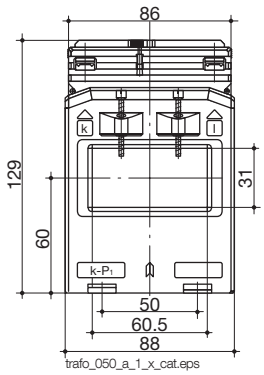

TBA 80

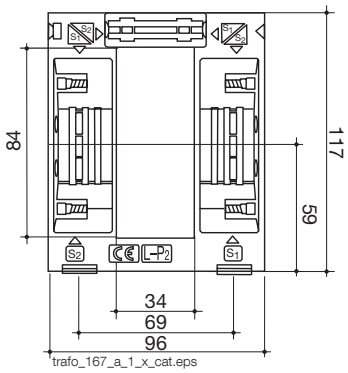

TBA 100 from 600 to 2500 A(1)
T2BA 100 from 1200 to 3000 A

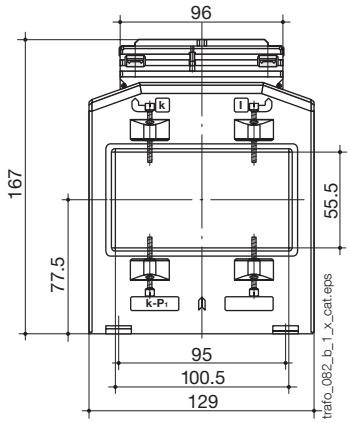

(1) TBA 100, 3000 and 4000 A: 214 x 129 x 78 mm.

TBA 103 and T2BA 103

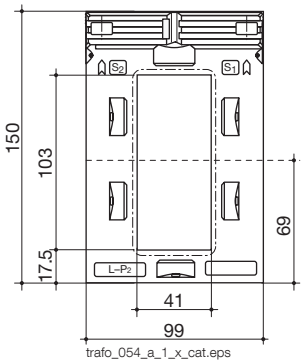

TBA 127 and T2BA 127

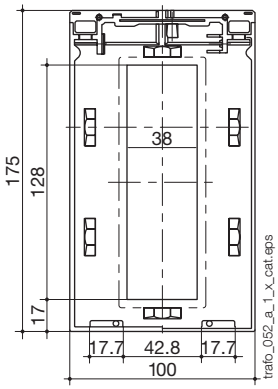

Bar-through CT	TBA 60	TBA 80	TBA 100	T2BA 100	TBA 103	T2BA 103	TBA 127	T2BA 127
Bar (mm)	60 x 30	84 x 34	100 x 55	100 x 55	103 x 41	103 x 41	128 x 38	128 x 38
H x W x D (mm)	129 x 88 x 78	117 x 96 x 68	167x129x78(1)	167 x 129 x 78	150 x 99 x 58	150 x 99 x 58	175 x 100 x 55	175 x 100 x 55

(1) TBA 100, 3000 and 4000 A: 214 x 129 x 78 mm.

Three-phase bar- or cable-through CT

References

		TCB3 18-20		TCB3 22-30	
Primary	**Secondary** (1)	**Class 1**	**Reference**	**Class 1**	**Reference**
3 x 100 A	3 x 5 A	1 VA	192T **3310**		
3 x 150 A	3 x 5 A	1.25 VA	192T **3315**		
3 x 200 A	3 x 5 A	1.5 VA	192T **3320**		
3 x 250 A	3 x 5 A	2.5 VA	192T **3325**	2.5 VA	192T **3425**
3 x 300 A	3 x 5 A			3.75 VA	192T **3430**
3 x 400 A	3 x 5 A			5 VA	192T **3440**
3 x 500 A	3 x 5 A			5 VA	192T **3450**
3 x 600 A	3 x 5 A			5 VA	192T **3460**

(1) 1 A secondary: on request.

Dimensions

TCB3 18-20

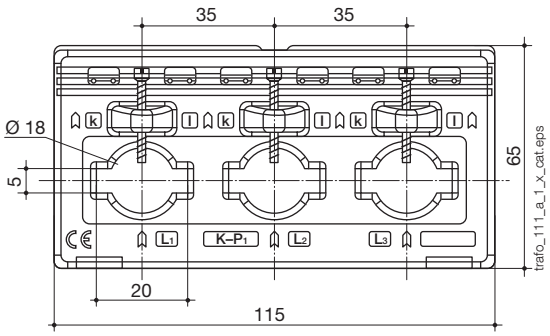

TCB3 22-30

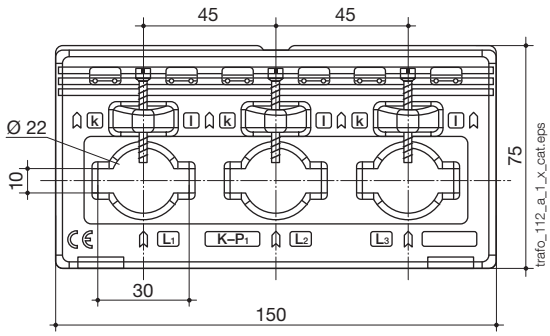

Three-phase bar- or cable-through CT	TCB3 18-20	TCB3 22-30
Cable Ø (mm)	18	22
Busbar	20 x 5	30 x 10
H x W x D (mm)	115 x 65 x 37	150 x 75 x 37
DIN-rail mounting	No	No

References

		TCA 13 — 3P	
Primary	**Secondary** [1]	**Class 1**	**Reference**
3 x 50 A	5 A	1 VA	192T **1905**
3 x 60 A	5 A	1.25 VA	192T **1906**
3 x 75 A	5 A	1.5 VA	192T **1907**
3 x 80 A	5 A	1.5 VA	192T **1908**
3 x 100 A	5 A	2.5 VA	192T **1910**
3 x 125 A	5 A	2.5 VA	192T **1912**
3 x 150 A	5 A	2.5 VA	192T **1915**
3 x 160 A	5 A	2.5 VA	192T **1916**

(1) 1 A secondary: on request.

Dimensions

TCA 13 — 3P

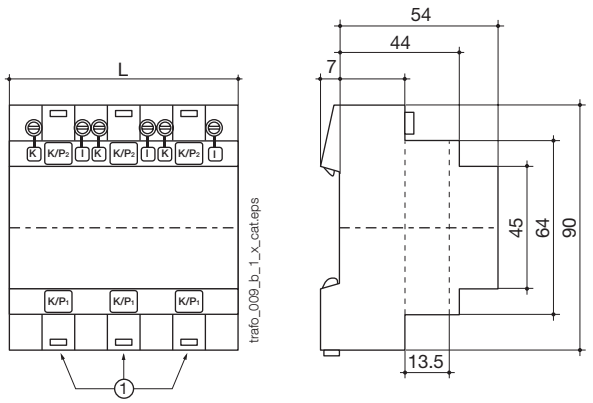

(1) Cable aperture Ø 13.5 mm.

Number of modules	Front panel Ingress Protection rating	Terminals Ingress Protection rating	W (mm)	Mounting
6	IP65	IP20	105	DIN rail 35 mm

Split-core CT

References

		TO 23			TO 58			TO 812			TO 816	
Primary	**Secondary**	**Class 1**	**Class 3**	**Reference**	**Class 0.5**	**Class 1**	**Reference**	**Class 0.5**	**Class 1**	**Reference**	**Class 0.5**	**Reference**
100 A	5 A		1.25 VA	192T **4601**								
150 A	5 A		1.5 VA	192T **4602**								
200 A	5 A		2.5 VA	192T **4603**								
250 A	5 A	1.5 VA		192T **4604**		1.5 VA	192T **4625**		1.5 VA	192T **4725**		
300 A	5 A	3.75 VA		192T **4605**		2.5 VA	192T **4630**		2.5 VA	192T **4730**		
400 A	5 A	5 VA		192T **4606**	1 VA		192T **4640**		2.5 VA	192T **4740**		
500 A	5 A				2.5 VA		192T **4650**	2.5 VA		192T **4750**		
600 A	5 A				2.5 VA		192T **4660**	2.5 VA		192T **4760**		
750 A	5 A				2.5 VA		192T **4675**	2.5 VA		192T **4775**		
800 A	5 A				2.5 VA		192T **4680**	2.5 VA		192T **4780**		
1000 A	5 A							5 VA		192T **4710**	10 VA	192T **4810**
1250 A	5 A							7.5 VA		192T **4712**	10 VA	192T **4812**
1500 A	5 A							7.5 VA		192T **4715**	10 VA	192T **4815**
1600 A	5 A										10 VA	192T **4814**
2000 A	5 A										10 VA	192T **4820**
2500 A	5 A										10 VA	192T **4825**
3000 A	5 A										15 VA	192T **4830**
4000 A	5 A										15 VA	192T **4840**
5000 A	5 A										15 VA	192T **4850**

Dimensions

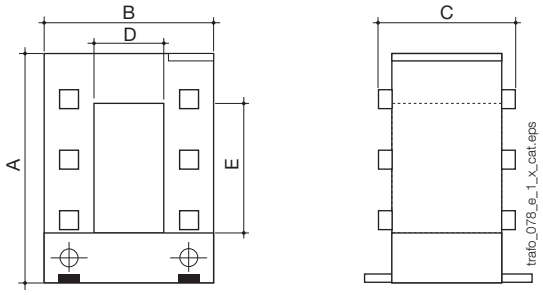

Mounting with M5 screws

Dimensions (mm)					
Type	**A (mm)**	**B (mm)**	**C (mm)**	**D (mm)**	**E (mm)**
TO 23	106	93	58	23	33
TO 58	158	125	58	55	85
TO 812	198	155	58	85	125
TO 816	243	195	79	85	165

Split-core CT	**TO 23**	**TO 58**	**TO 812**	**TO 816**
H x W x D (mm)	106 x 93 x 58	158 x 125 x 58	198 x 155 x 58	243 x 195 x 75

Summation CT

References

		BSA 02	BSA 03	BSA 04
Primary	**Secondary**	**Reference**	**Reference**	**Reference**
5 + 5/5 A	5 A	192T **0802**		
5 + 5 + 5/5 A	5 A		192T **0803**	
5 + 5 + 5 + 5/5 A	5 A			192T **0904**

Dimensions

BSA 02 and BSA 03

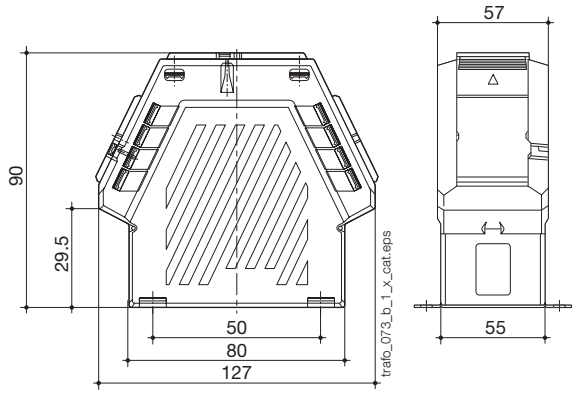

BSA 04

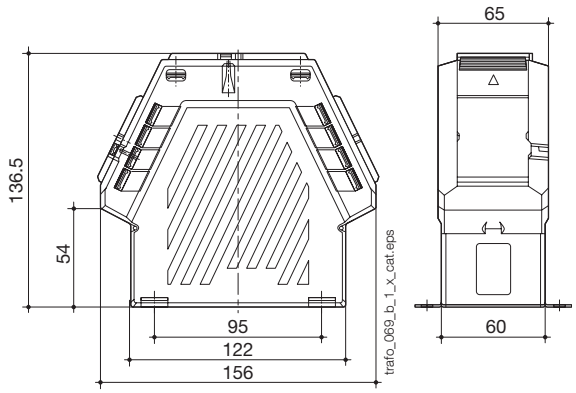

Summation CT	BSA 02	BSA 03	BSA 04
H x W x D (mm)	90 x 127 x 57	90 x 127 x 57	136.5 x 156 x 65
DIN-rail mounting	No	No	No